HL253-16

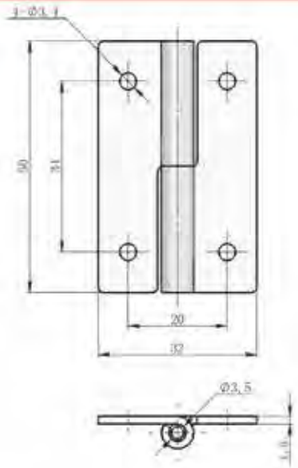

特征说明：

- 材　　质：SPCC/SUS材质
- 表面处理：SPCC镀锌，SUS拉丝
- 结构功能：明装铰链，通过螺丝固定，安装拆卸简易快捷方便
- 用　　途：一般使用于通讯机箱机柜，电箱电柜，机械机床设备等钣金箱体使用
- 备　　注：适用门板厚度1-3mm

Feature Description:

Material: SPCC/SUS material
Surface treatment: SPCC galvanized, SUS brushed
Structural function: exposed ammonium chain, fixed by screws, easy to install and disassemble Quick and easy
Uses: generally used in chassis cabinets, electrical cabinets, mechanical equipment, automation equipment sheet metal boxes
Remarks: Applicable door panel thickness 1−3mm

HL253-20

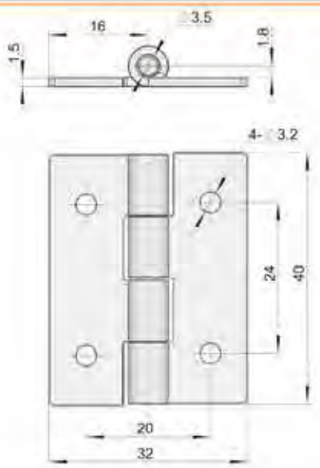

特征说明：

- 材　　质：SPCC/SUS材质
- 表面处理：SPCC镀锌，SUS拉丝
- 结构功能：明装铰链，通过螺丝固定，安装拆卸简易快捷方便
- 用　　途：一般使用于通讯机箱机柜，电箱电柜，机械机床设备等钣金箱体使用
- 备　　注：适用门板厚度1-3mm

Feature Description:

Material: SPCC/SUS material
Surface treatment: SPCC galvanized, SUS brushed
Structural function: exposed ammonium chain, fixed by screws, easy to install and disassemble Quick and easy
Uses: generally used in chassis cabinets, electrical cabinets, mechanical equipment, automation equipment sheet metal boxes
Remarks: Applicable door panel thickness 1−3mm

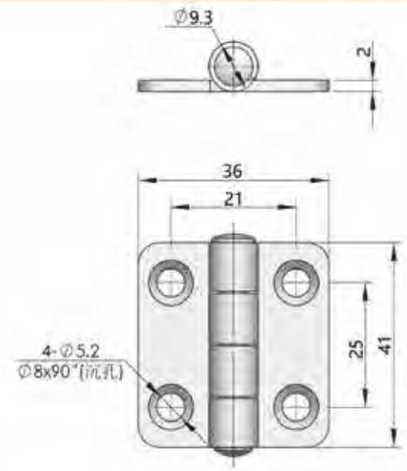

Feature Description:

Material: SPCC/SUS material
Surface treatment: SPCC galvanized, SUS brushed
Structural function: exposed ammonium chain, fixed by screws, easy to install and disassemble Quick and easy
Uses: generally used in chassis cabinets, electrical cabinets, mechanical equipment, automation equipment sheet metal boxes
Remarks: Applicable door panel thickness 1−3mm

HL253-21

特征说明：

- 材　　质：SPCC/SUS材质
- 表面处理：SPCC镀锌，SUS拉丝
- 结构功能：明装铰链，通过螺丝固定，安装拆卸简易快捷方便
- 用　　途：一般使用于通讯机箱机柜，电箱电柜，机械机床设备等钣金箱体使用
- 备　　注：适用门板厚度1-3mm

Feature Description:

Material: SPCC/SUS material
Surface treatment: SPCC galvanized, SUS brushed
Structural function: exposed ammonium chain, fixed by screws, easy to install and disassemble Quick and easy
Uses: generally used in chassis cabinets, electrical cabinets, mechanical equipment, automation equipment sheet metal boxes
Remarks: Applicable door panel thickness 1−3mm

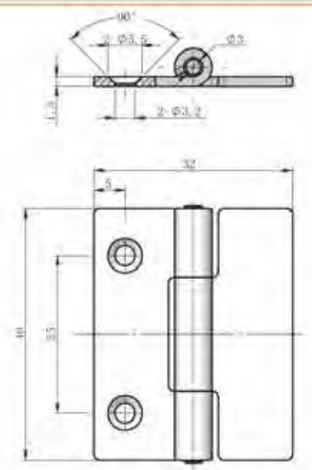

Feature Description:

Material: SPCC/SUS material
Surface treatment: SPCC galvanized, SUS brushed
Structural function: exposed ammonium chain, fixed by screws, easy to install and disassemble Quick and easy
Uses: generally used in chassis cabinets, electrical cabinets, mechanical equipment, automation equipment sheet metal boxes
Remarks: Applicable door panel thickness 1−3mm

HL253-25

特征说明：

- 材　　质：SPCC/SUS材质
- 表面处理：SPCC镀锌，SUS拉丝
- 结构功能：明装铰链，通过螺丝固定，安装拆卸简易快捷方便
- 用　　途：一般使用于通讯机箱机柜，电箱电柜，机械机床设备等钣金箱体使用
- 备　　注：适用门板厚度1-3mm

HL254

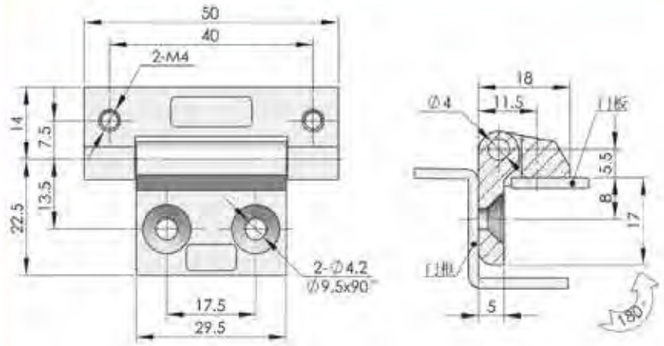

特征说明:

- 材　　质: ZDC锌合金
- 表面处理: 明装铰链, 镀铬
- 结构功能: 暗装铰链, 通过螺丝固定, 安装拆卸简易方便快捷
- 用　　途: 一般使用于通讯机箱机柜、电箱电柜、机械机床设备等钣金箱体使用
- 备　　注: 适用门板厚度1-3mm

Feature Description:

Material: ZDC zinc alloy
Surface treatment: exposed hinge, chrome plating
Structural function: concealed hinge, fixed by screws, easy to install and disassemble
Uses: generally used in chassis cabinets, electrical cabinets, mechanical equipment, automation equipment sheet metal boxes
Remarks: Applicable door panel thickness 1−3mm

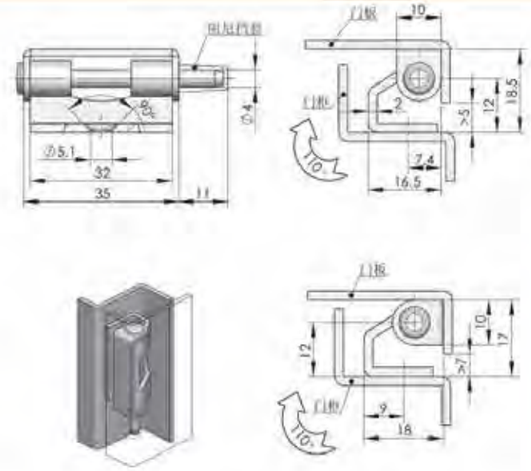

HL257

特征说明:

- 材　　质: SPCC/SUS两种材质
- 表面处理: SPCC镀锌、SUS本色
- 结构功能: 暗装铰链、通过焊接固定安装、开启角度110°
- 用　　途: 一般使用于机箱机柜、电箱电柜、机械设备、自动化设备钣金箱体使用
- 备　　注: 适用门板厚度1-3mm

Feature Description:

Material: SPCC/SUS two materials
Surface treatment: SPCC galvanized, SUS natural color
Structural function: concealed ammonium chain, fixed installation by welding, opening angle 110°
Uses: generally used in chassis cabinets, electrical cabinets, mechanical equipment, automation equipment sheet metal boxes
Remarks: Applicable door panel thickness 1−3mm

HL255

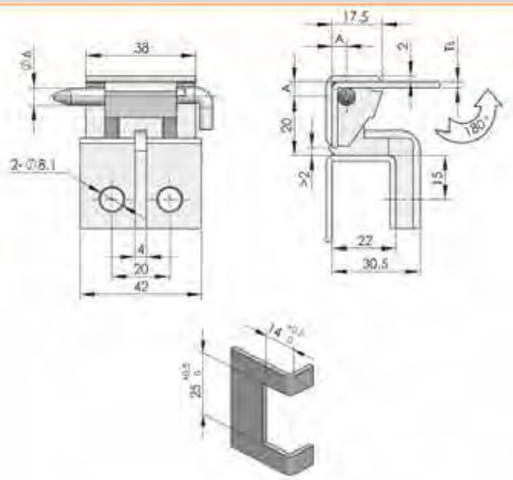

特征说明:

- 材　　质: ZDC锌合金
- 表面处理: ZDC黑色, 镀铬
- 结构功能: 暗装铰链, 通过螺丝固定, 安装拆卸简易方便快捷, 附件焊接
- 用　　途: 一般使用于通讯机箱机柜、电箱电柜、机械机床设备等钣金箱体使用
- 备　　注: 适用门板厚度1-3mm

Feature Description:

Material: ZDC zinc alloy
Surface treatment: exposed hinge, chrome plating
Structural function: concealed hinge, fixed by screws, easy to install and disassemble
Uses: generally used in chassis cabinets, electrical cabinets, mechanical equipment, automation equipment sheet metal boxes
Remarks: Applicable door panel thickness 1−3mm

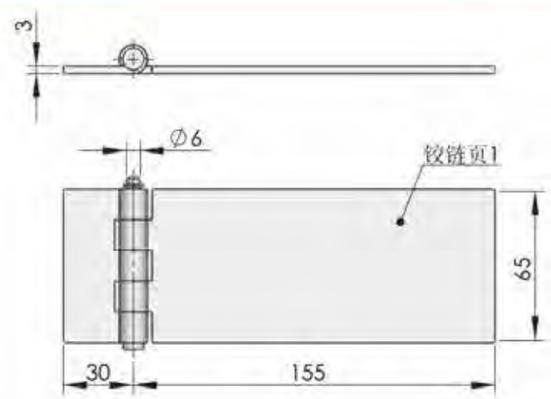

HL269

特征说明:

- 材　　质: SPCC/SUS两种材质
- 表面处理: SPCC镀锌、SUS本色
- 结构功能: 暗装铰链、通过焊接固定安装、开启角度180°
- 用　　途: 一般使用于机箱机柜、电箱电柜、机械设备、自动化设备钣金箱体使用
- 备　　注: 适用门板厚度1-3mm

Feature Description:

Material: SPCC/SUS two materials
Surface treatment: SPCC galvanized, SUS natural color
Structural function: concealed ammonium chain, fixed installation by welding, opening angle 180°
Uses: generally used in chassis cabinets, electrical cabinets, mechanical equipment, automation equipment sheet metal boxes
Remarks: Applicable door panel thickness 1−3mm

地址：广东省肇庆市高要区金利镇都播工业区　电话：13929897256　邮箱：526202547@qq.com
Add: Dubo Industrial Zone, Jinli Town, Gaoyao District, Zhaoqing City, Guangdong Province　TEL: 13929897256　Email: 526202547@qq.com

地址：广东省肇庆市高要区金利镇都播工业区　电话：13929897256　邮箱：526202547@qq.com
Add: Dubo Industrial Zone, Jinli Town, Gaoyao District, Zhaoqing City, Guangdong Province　TEL: 13929897256　Email: 526202547@qq.com

HL272-1(阻力铰链)

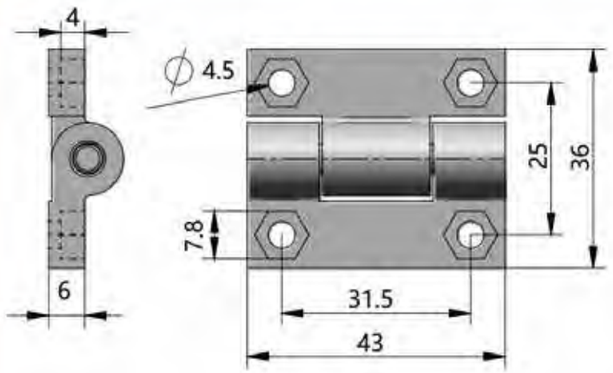

特征说明:

- 材　　质: ZDC锌合金
- 表面处理: ZDC黑色, 镀铬
- 结构功能: 阻力铰链, 通过螺丝固定, 安装拆卸简易方便快捷, 附件焊接
- 用　　途: 一般使用于通讯机箱机柜, 电箱电柜, 机械机床设备等钣金箱体使用
- 备　　注: 适用门板厚度1-3mm

Feature Description:

Material: ZDC zinc alloy
Surface treatment: ZDC black, chrome plated
Structural function: resistance hinge, fixed by screws, easy and convenient installation and disassembly, accessory welding
Uses: generally used in chassis cabinets, electrical cabinets, mechanical equipment, automation equipment sheet metal boxes
Remarks: Applicable door panel thickness 1−3mm

HL272-2(POM)

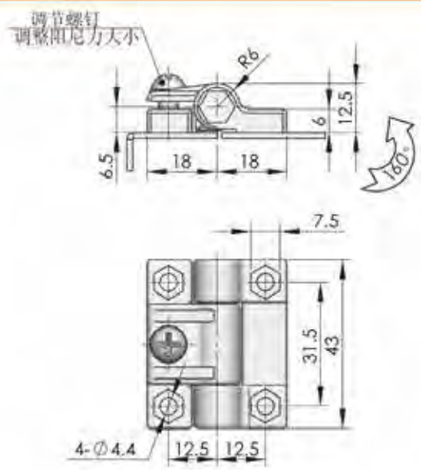

特征说明:

- 材　　质: POM材质
- 表面处理: 黑色, 白色
- 结构功能: 阻力铰链, 通过螺丝固定, 安装拆卸简易方便快捷, 附件焊接
- 用　　途: 一般使用于通讯机箱机柜, 电箱电柜, 机械机床设备等钣金箱体使用
- 备　　注: 适用门板厚度1-3mm

Feature Description:

Material: ZDC zinc alloy
Surface treatment: ZDC black, chrome plated
Structural function: resistance hinge, fixed by screws, easy and convenient installation and disassembly, accessory welding
Uses: generally used in chassis cabinets, electrical cabinets, mechanical equipment, automation equipment sheet metal boxes
Remarks: Applicable door panel thickness 1−3mm

地址：广东省肇庆市高要区金利镇都播工业区　电话：13929897256　邮箱：526202547@qq.com
Add: Dubo Industrial Zone, Jinli Town, Gaoyao District, Zhaoqing City, Guangdong Province　TEL: 13929897256　Email: 526202547@qq.com

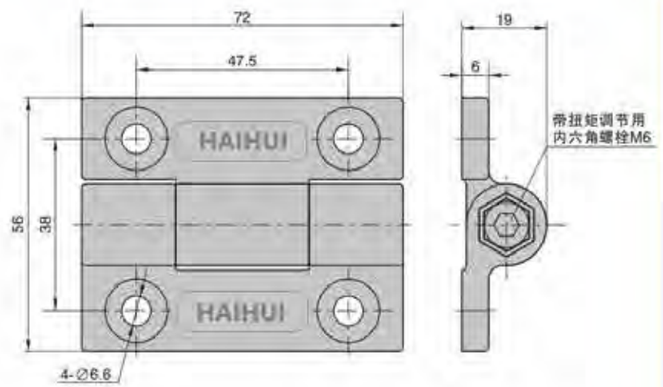

Feature Description:

Material: ZDC zinc alloy
Surface treatment: ZDC black, chrome plated
Structural function: resistance hinge, fixed by screws, easy and convenient installation and disassembly, accessory welding
Uses: generally used in chassis cabinets, electrical cabinets, mechanical equipment, automation equipment sheet metal boxes
Remarks: Applicable door panel thickness 1−3mm

HL272-3

特征说明:

- 材　　质: ZDC锌合金
- 表面处理: ZDC黑色, 镀铬
- 结构功能: 阻力铰链, 通过螺丝固定, 安装拆卸简易方便快捷, 附件焊接
- 用　　途: 一般使用于通讯机箱机柜, 电箱电柜, 机械机床设备等钣金箱体使用
- 备　　注: 适用门板厚度1-3mm

Feature Description:

Material: SPCC/SUS material
Surface treatment: SPCC galvanized, SUS brushed
Structural function: concealed ammonium chain, fixed installation by welding, opening angle 90° −120°
Uses: generally used in chassis cabinets, electrical cabinets, mechanical equipment, automation equipment sheet metal boxes
Remarks: Applicable door panel thickness 1−3mm

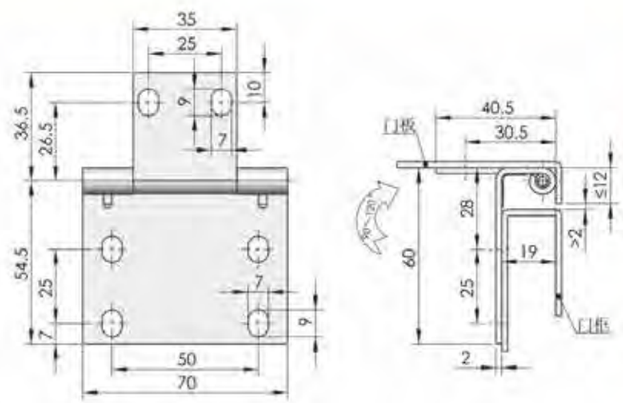

HL273

特征说明:

- 材　　质: SPCC/SUS两种材质
- 表面处理: SPCC镀锌, SUS本色
- 结构功能: 暗装铰链, 通过焊接固定安装, 开启角度90°-120°
- 用　　途: 一般使用于机箱机柜, 电箱电柜, 机械设备, 自动化设备钣金箱体使用
- 备　　注: 适用门板厚度1-3mm

Feature Description:

Material: SPCC/SUS material
Surface treatment: SPCC galvanized, SUS brushed
Structural function: concealed ammonium chain, fixed installation by welding, opening angle 90° −120°
Uses: generally used in chassis cabinets, electrical cabinets, mechanical equipment, automation equipment sheet metal boxes
Remarks: Applicable door panel thickness 1−3mm

地址：广东省肇庆市高要区金利镇都播工业区　电话：13929897256　邮箱：526202547@qq.com
Add: Dubo Industrial Zone, Jinli Town, Gaoyao District, Zhaoqing City, Guangdong Province　TEL: 13929897256　Email: 526202547@qq.com

HL275-1

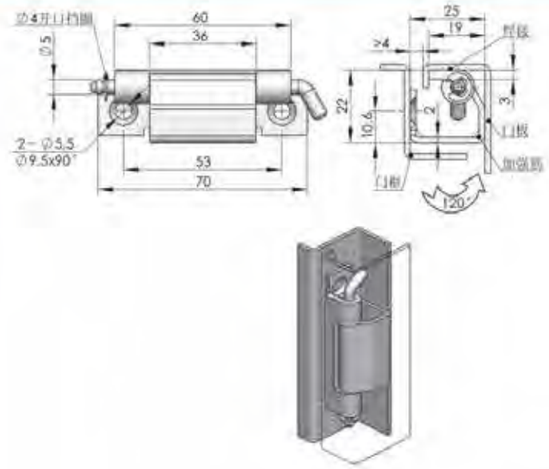

特征说明:

- 材　　质: SPCC/SUS两种材质
- 表面处理: SPCC镀锌、SUS本色
- 结构功能: 暗装铰链，通过焊接固定安装，开启角度90°-120°
- 用　　途: 一般使用于机箱机柜、电箱电柜、机械设备、自动化设备钣金箱体使用
- 备　　注: 适用门板厚度1-3mm

Feature Description:

Material: SPCC/SUS material
Surface treatment: SPCC galvanized, SUS brushed
Structural function: concealed ammonium chain, fixed installation by welding, opening angle 90° −120°
Uses: generally used in chassis cabinets, electrical cabinets, mechanical equipment, automation equipment sheet metal boxes
Remarks: Applicable door panel thickness 1−3mm

HL280-2

HL280-1

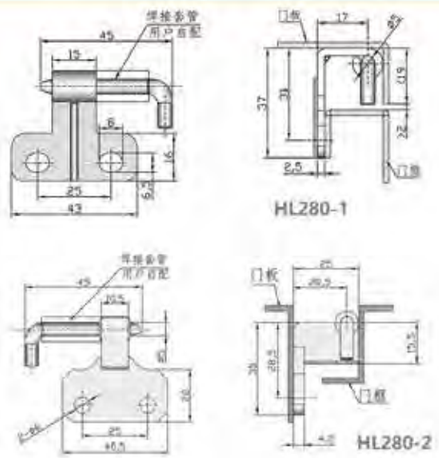

特征说明:

- 材　　质: SPCC/SUS两种材质
- 表面处理: SPCC镀锌、SUS本色
- 结构功能: 暗装铰链，通过焊接固定安装，开启角度90°-120°
- 用　　途: 一般使用于机箱机柜、电箱电柜、机械设备、自动化设备钣金箱体使用
- 备　　注: 适用门板厚度1-3mm

Feature Description:

Material: SPCC/SUS material
Surface treatment: SPCC galvanized, SUS brushed
Structural function: concealed ammonium chain, fixed installation by welding, opening angle 90° −120°
Uses: generally used in chassis cabinets, electrical cabinets, mechanical equipment, automation equipment sheet metal boxes
Remarks: Applicable door panel thickness 1−3mm

地址：广东省肇庆市高要区金利镇都播工业区　电话：13929897256　邮箱：526202547@qq.com
Add: Dubo Industrial Zone, Jinli Town, Gaoyao District, Zhaoqing City, Guangdong Province　TEL: 13929897256　Email: 526202547@qq.com

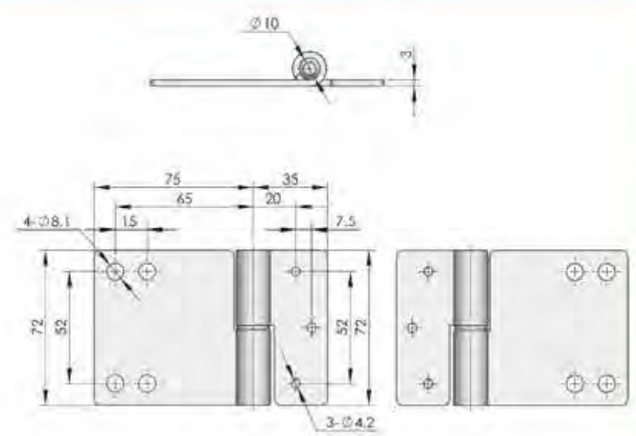

HL281

Feature Description:

Material: SPCC/SUS material
Surface treatment: SPCC galvanized, SUS brushed
Structural function: exposed hinge, fixed by screws, easy to install and disassemble, quick and convenient, divided into left and right directions
Uses: generally used in chassis cabinets, electrical cabinets, mechanical equipment, automation equipment sheet metal boxes
Remarks: Applicable door panel thickness 1−3mm

特征说明:

- 材　　质: SPCC/SUS材质
- 表面处理: SPCC镀锌，SUS拉丝
- 结构功能: 明装铰链，通过螺丝固定，安装拆卸简易快捷方便,分左右方向
- 用　　途: 一般使用于通讯机箱机柜、电箱电柜、机械机床设备等钣金箱体使用
- 备　　注: 适用门板厚度1-3mm

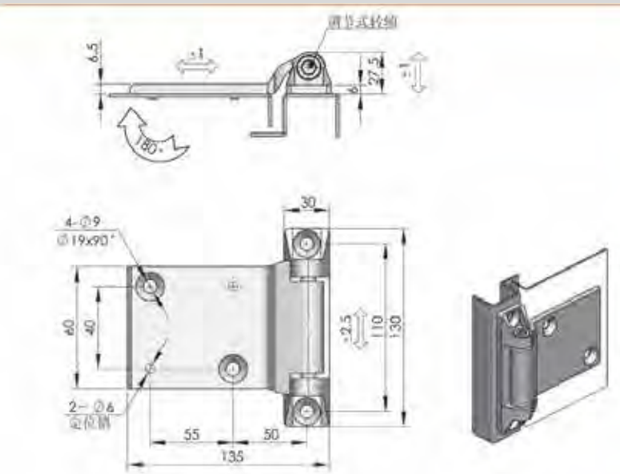

HL282-Y
HL282-Z

Feature Description:

Material: ZDC zinc alloy
Surface treatment: exposed hinge, chrome plating
Structural function: concealed hinge, fixed by screws, easy to install and disassemble
Uses: generally used in chassis cabinets, electrical cabinets, mechanical equipment, automation equipment sheet metal boxes
Remarks: Applicable door panel thickness 1−3mm

特征说明:

- 材　　质: ZDC锌合金
- 表面处理: 明装铰链，镀铬
- 结构功能: 暗装铰链，通过螺丝固定，安装拆卸简易方便快捷，可调节阻力
- 用　　途: 一般使用于通讯机箱机柜、电箱电柜、机械机床设备等钣金箱体使用
- 备　　注: 适用门板厚度1-3mm

地址：广东省肇庆市高要区金利镇都播工业区　电话：13929897256　邮箱：526202547@qq.com
Add: Dubo Industrial Zone, Jinli Town, Gaoyao District, Zhaoqing City, Guangdong Province　TEL: 13929897256　Email: 526202547@qq.com

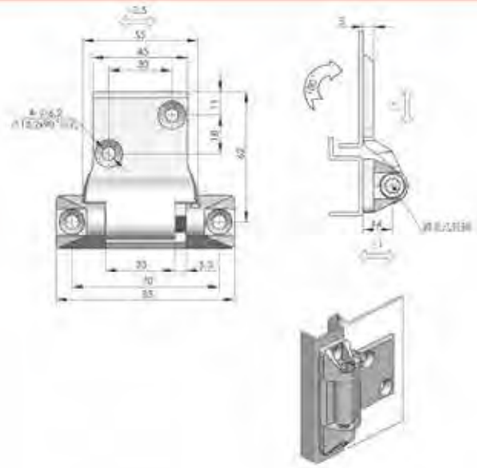

HL282-2Z
HL282-2Y

特征说明：

- 材　　质：ZDC锌合金
- 表面处理：暴露铰链、镀铬
- 结构功能：暗装铰链，通过螺丝固定，安装拆卸简易方便快捷，可调节阻力
- 用　　途：一般使用于通讯机箱机柜、电箱电柜、机械机床设备等钣金箱体使用
- 备　　注：适用门板厚度1-3mm

Feature Description:

Material: ZDC zinc alloy
Surface treatment: exposed hinge, chrome plating
Structural function: concealed hinge, fixed by screws, easy to install and disassemble
Uses: generally used in chassis cabinets, electrical cabinets, mechanical equipment, automation equipment sheet metal boxes
Remarks: Applicable door panel thickness 1−3mm

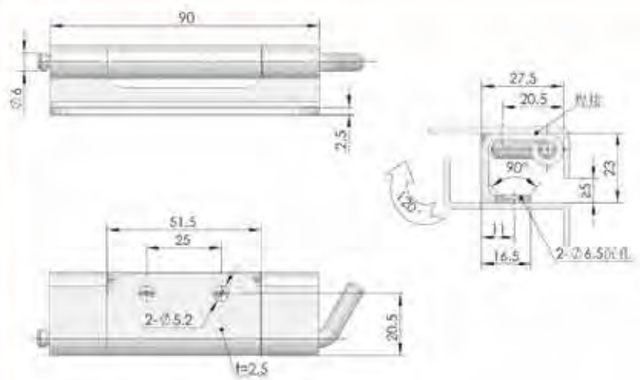

HL283-1

特征说明：

- 材　　质：SPCC/SUS两种材质
- 表面处理：SPCC镀锌、SUS本色
- 结构功能：暗装铰链，通过焊接固定安装，开启角度90°-120°
- 用　　途：一般使用于机箱机柜、电箱电柜、机械设备、自动化设备钣金箱体使用
- 备　　注：适用门板厚度1-3mm

Feature Description:

Material: SPCC/SUS material
Surface treatment: SPCC galvanized, SUS brushed
Structural function: concealed ammonium chain, fixed installation by welding, opening angle 90° −120°
Uses: generally used in chassis cabinets, electrical cabinets, mechanical equipment, automation equipment sheet metal boxes
Remarks: Applicable door panel thickness 1−3mm

地址：广东省肇庆市高要区金利镇都播工业区　电话：13929897256　邮箱：526202547@qq.com
Add: Dubo Industrial Zone, Jinli Town, Gaoyao District, Zhaoqing City, Guangdong Province　TEL: 13929897256　Email: 526202547@qq.com

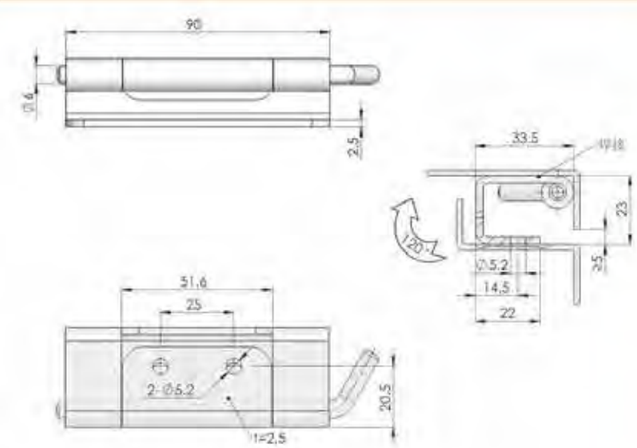

HL283-2

特征说明：

- 材　　质：SPCC/SUS两种材质
- 表面处理：SPCC镀锌、SUS本色
- 结构功能：暗装铰链，通过焊接固定安装，开启角度90°-120°
- 用　　途：一般使用于机箱机柜、电箱电柜、机械设备、自动化设备钣金箱体使用
- 备　　注：适用门板厚度1-3mm

Feature Description:

Material: SPCC/SUS material
Surface treatment: SPCC galvanized, SUS brushed
Structural function: concealed ammonium chain, fixed installation by welding, opening angle 90° −120°
Uses: generally used in chassis cabinets, electrical cabinets, mechanical equipment, automation equipment sheet metal boxes
Remarks: Applicable door panel thickness 1−3mm

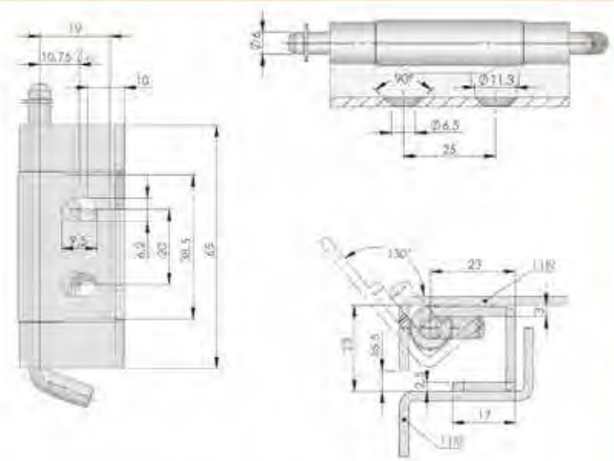

HL283-8

特征说明：

- 材　　质：SPCC/SUS两种材质
- 表面处理：SPCC镀锌、SUS本色
- 结构功能：暗装铰链，通过焊接固定安装，开启角度90°-120°
- 用　　途：一般使用于机箱机柜、电箱电柜、机械设备、自动化设备钣金箱体使用
- 备　　注：适用门板厚度1-3mm

Feature Description:

Material: SPCC/SUS material
Surface treatment: SPCC galvanized, SUS brushed
Structural function: concealed ammonium chain, fixed installation by welding, opening angle 90° −120°
Uses: generally used in chassis cabinets, electrical cabinets, mechanical equipment, automation equipment sheet metal boxes
Remarks: Applicable door panel thickness 1−3mm

地址：广东省肇庆市高要区金利镇都播工业区　电话：13929897256　邮箱：526202547@qq.com
Add: Dubo Industrial Zone, Jinli Town, Gaoyao District, Zhaoqing City, Guangdong Province　TEL: 13929897256　Email: 526202547@qq.com

HL295-1

HL295-2

HL259-3

HL295-4

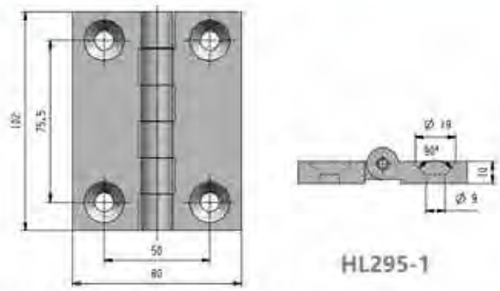

HL295-1

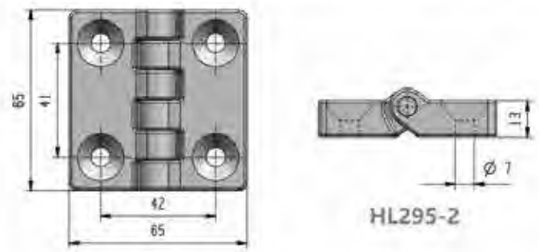

HL295-2

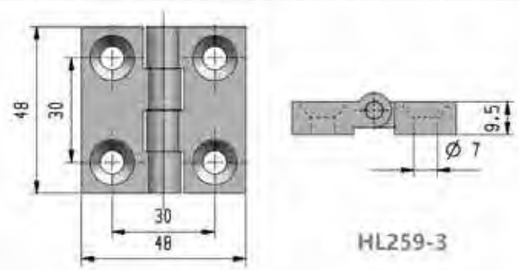

HL259-3

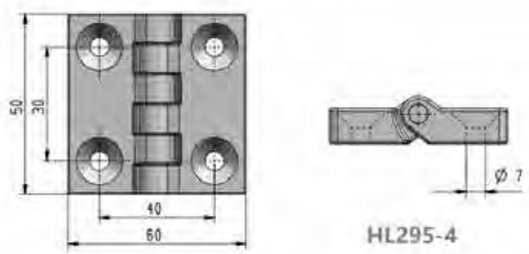

HL295-4

特征说明:

- 材　　质：PA材质
- 表面处理：黑色
- 结构功能：明装铰链，通过螺丝固定，安装拆卸简易方便快捷
- 用　　途：一般使用于机箱机柜、电箱电柜、机械设备、自动化设备钣金箱体使用
- 备　　注：适用门板厚度1-3mm

Feature Description:

Material: PA material
Surface treatment: black
Structural function: exposed ammonium chain, fixed by screws, easy to install and disassemble Quick and easy
Uses: generally used in chassis cabinets, electrical cabinets, mechanical equipment, automation equipment sheet metal boxes
Remarks: Applicable door panel thickness 1–3mm

地址：广东省肇庆市高要区金利镇都播工业区　电话：13929897256　邮箱：526202547@qq.com
Add: Dubo Industrial Zone, Jinli Town, Gaoyao District, Zhaoqing City, Guangdong Province　TEL: 13929897256　Email: 526202547@qq.com

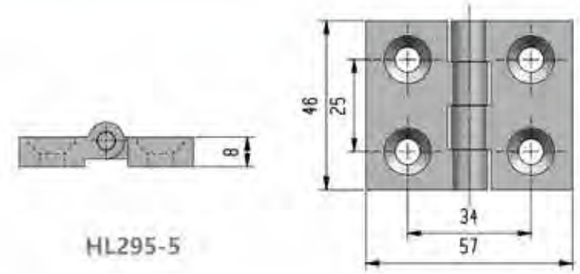

HL295-5

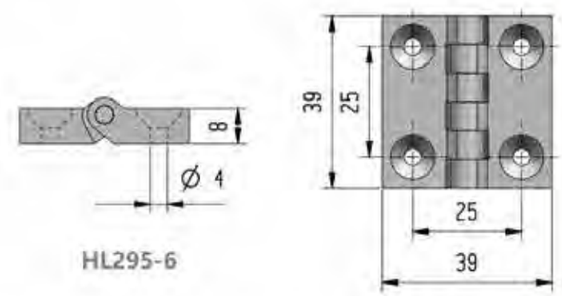

HL295-6

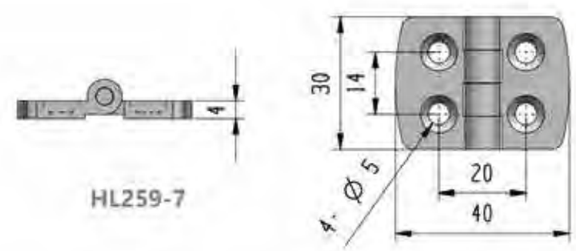

HL259-7

HL295-5

HL295-6

HL295-7

Feature Description:

Material: PA material
Surface treatment: black
Structural function: exposed ammonium chain, fixed by screws, easy to install and disassemble Quick and easy
Uses: generally used in chassis cabinets, electrical cabinets, mechanical equipment, automation equipment sheet metal boxes
Remarks: Applicable door panel thickness 1–3mm

特征说明:

- 材　　质：PA材质
- 表面处理：黑色
- 结构功能：明装铰链，通过螺丝固定，安装拆卸简易方便快捷
- 用　　途：一般使用于机箱机柜、电箱电柜、机械设备、自动化设备钣金箱体使用
- 备　　注：适用门板厚度1-3mm

把手锁 Handle lock
圆柱锁 Cylinder lock
平面锁 Plane lock
连杆锁 Rod control lock
面板锁 Panel lock
搭扣锁 Tonggle and hook
拉手 Handles
限位 Door stop
铰链 Hinge
冷库把手 Handle latch
磁吸 Magnet catch
附件 Accessories

地址：广东省肇庆市高要区金利镇都播工业区　电话：13929897256　邮箱：526202547@qq.com
Add: Dubo Industrial Zone, Jinli Town, Gaoyao District, Zhaoqing City, Guangdong Province　TEL: 13929897256　Email: 526202547@qq.com

HL350-60S

HL350-50S

HL350-40S

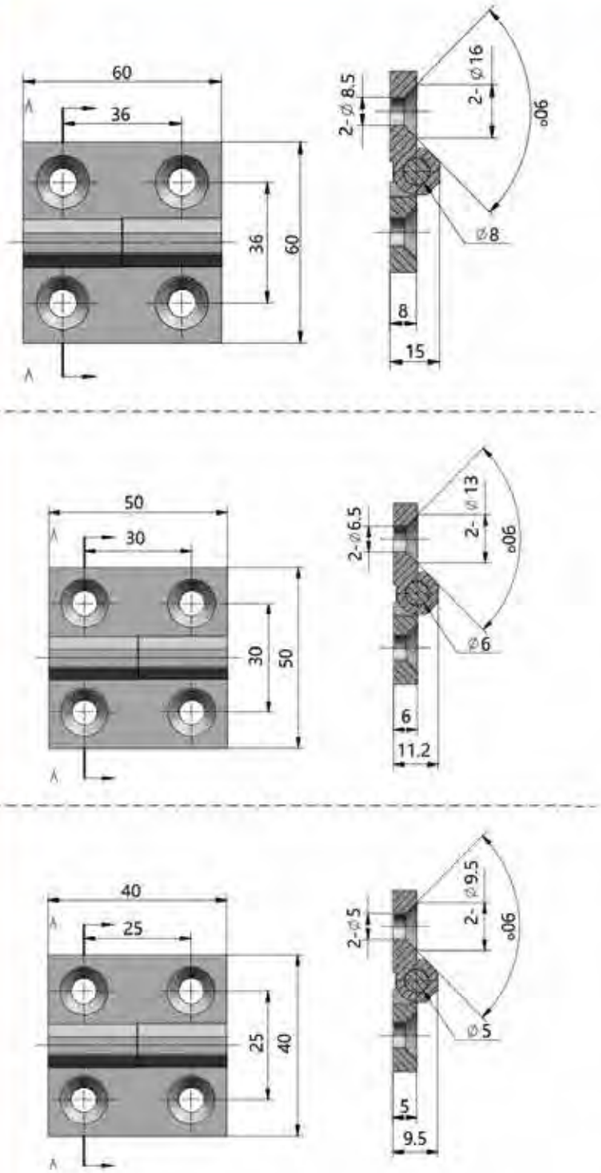

特征说明:

- 材　　质：SUS不锈钢
- 表面处理：SUS拉丝、镜面
- 结构功能：明装铰链，通过螺丝固定，安装拆卸简易方便快捷
- 用　　途：一般使用于机箱机柜、电箱电柜、机械设备、自动化设备钣金箱体使用
- 备　　注：适用门板厚度1-3mm

Feature Description:

Material: SUS stainless steel
Surface treatment: SUS wire drawing, mirror
Structural function: exposed ammonium chain, fixed by screws, easy to install and disassemble Quick and easy
Uses: generally used in chassis cabinets, electrical cabinets, mechanical equipment, automation equipment sheet metal boxes
Remarks: Applicable door panel thickness 1-3mm

地址：广东省肇庆市高要区金利镇都播工业区　电话：13929897256　邮箱：526202547@qq.com
Add: Dubo Industrial Zone, Jinli Town, Gaoyao District, Zhaoqing City, Guangdong Province　TEL: 13929897256　Email: 526202547@qq.com

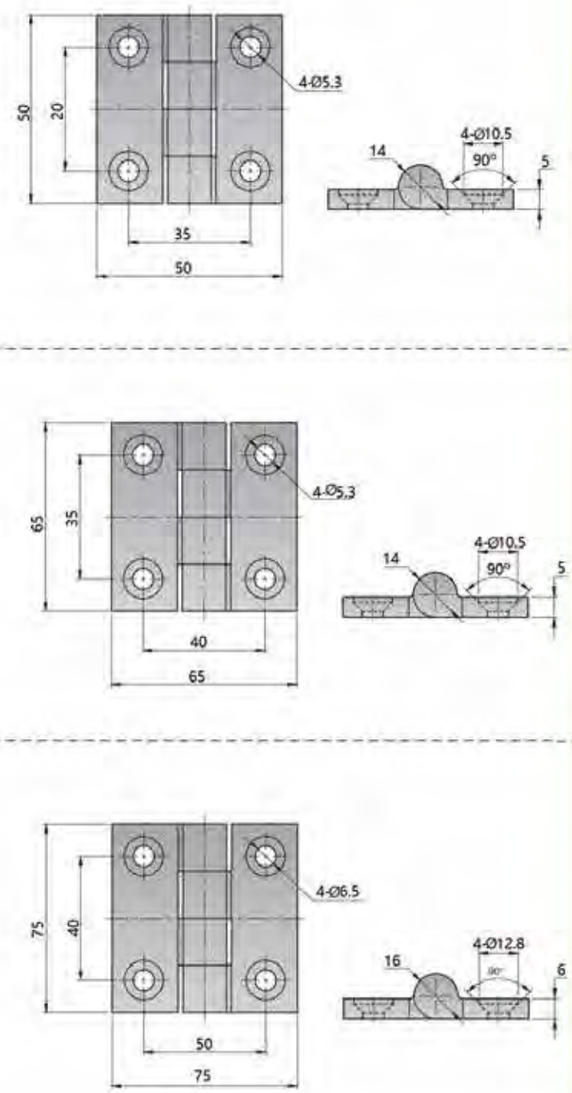

HL5050S

HL6565S

HL7575S

Feature Description:

Material: SUS stainless steel
Surface treatment: SUS wire drawing, mirror
Structural function: exposed ammonium chain, fixed by screws, easy to install and disassemble Quick and easy
Uses: generally used in chassis cabinets, electrical cabinets, mechanical equipment, automation equipment sheet metal boxes
Remarks: Applicable door panel thickness 1-3mm

特征说明:

- 材　　质：SUS不锈钢
- 表面处理：SUS拉丝、镜面
- 结构功能：明装铰链，通过螺丝固定，安装拆卸简易方便快捷
- 用　　途：一般使用于机箱机柜、电箱电柜、机械设备、自动化设备钣金箱体使用
- 备　　注：适用门板厚度1-3mm

把手锁 Handle lock
圆柱锁 Cylinder lock
平面锁 Plane lock
连杆锁 Rod control lock
面板锁 Panel lock
搭扣锁 Tonggle and hook
拉手 Handles
限位 Door stop
铰链 Hinge
冷库把手 Handle latch
磁吸 Magnet catch
附件 Accessories

地址：广东省肇庆市高要区金利镇都播工业区　电话：13929897256　邮箱：526202547@qq.com
Add: Dubo Industrial Zone, Jinli Town, Gaoyao District, Zhaoqing City, Guangdong Province　TEL: 13929897256　Email: 526202547@qq.com

HL7540S

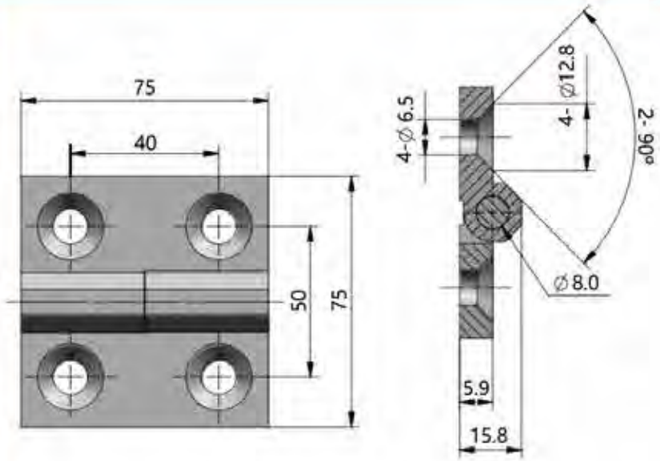

特征说明：

- 材　　质：SUS不锈钢
- 表面处理：SUS拉丝、镜面
- 结构功能：明装铰链，通过螺丝固定，安装拆卸简易方便快捷
- 用　　途：一般使用于机箱机柜、电箱电柜、机械设备、自动化设备钣金箱体使用
- 备　　注：适用门板厚度1-3mm

Feature Description:

Material: SUS stainless steel
Surface treatment: SUS wire drawing, mirror
Structural function: exposed ammonium chain, fixed by screws, easy to install and disassemble Quick and easy
Uses: generally used in chassis cabinets, electrical cabinets, mechanical equipment, automation equipment sheet metal boxes
Remarks: Applicable door panel thickness 1–3mm

HL6535S

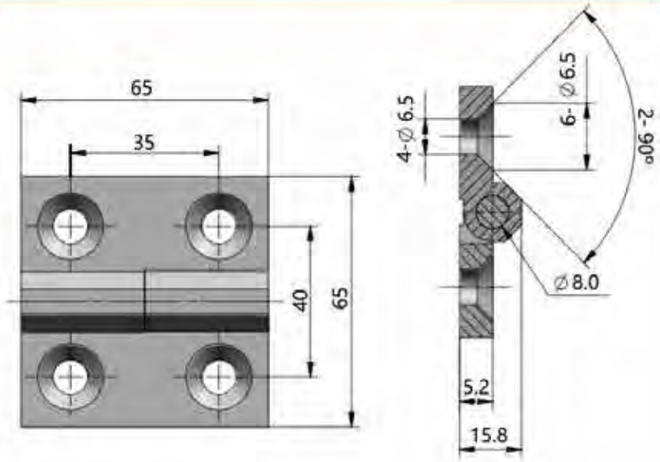

特征说明：

- 材　　质：SUS不锈钢
- 表面处理：SUS拉丝、镜面
- 结构功能：明装铰链，通过螺丝固定，安装拆卸简易方便快捷
- 用　　途：一般使用于机箱机柜、电箱电柜、机械设备、自动化设备钣金箱体使用
- 备　　注：适用门板厚度1-3mm

Feature Description:

Material: SUS stainless steel
Surface treatment: SUS wire drawing, mirror
Structural function: exposed ammonium chain, fixed by screws, easy to install and disassemble Quick and easy
Uses: generally used in chassis cabinets, electrical cabinets, mechanical equipment, automation equipment sheet metal boxes
Remarks: Applicable door panel thickness 1–3mm

地址：广东省肇庆市高要区金利镇都播工业区　电话：13929897256　邮箱：526202547@qq.com
Add: Dubo Industrial Zone, Jinli Town, Gaoyao District, Zhaoqing City, Guangdong Province　TEL: 13929897256　Email: 526202547@qq.com

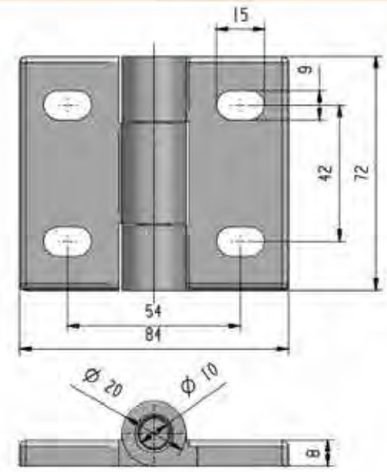

Feature Description:

Material: SUS stainless steel
Surface treatment: SUS wire drawing, mirror
Structural function: exposed ammonium chain, fixed by screws, easy to install and disassemble Quick and easy
Uses: generally used in chassis cabinets, electrical cabinets, mechanical equipment, automation equipment sheet metal boxes
Remarks: Applicable door panel thickness 1–3mm

HL7242S

特征说明：

- 材　　质：SUS不锈钢
- 表面处理：SUS拉丝、镜面
- 结构功能：明装铰链，通过螺丝固定，安装拆卸简易方便快捷
- 用　　途：一般使用于机箱机柜、电箱电柜、机械设备、自动化设备钣金箱体使用
- 备　　注：适用门板厚度1-3mm

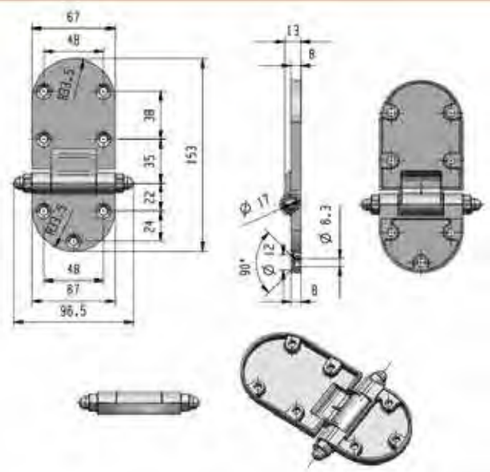

Feature Description:

Material: SUS stainless steel
Surface treatment: SUS wire drawing, mirror
Structural function: exposed ammonium chain, fixed by screws, easy to install and disassemble Quick and easy
Uses: generally used in chassis cabinets, electrical cabinets, mechanical equipment, automation equipment sheet metal boxes
Remarks: Applicable door panel thickness 1–3mm

HL9667S

特征说明：

- 材　　质：SUS不锈钢
- 表面处理：SUS拉丝、镜面
- 结构功能：明装铰链，通过螺丝固定，安装拆卸简易方便快捷
- 用　　途：一般使用于机箱机柜、电箱电柜、机械设备、自动化设备钣金箱体使用
- 备　　注：适用门板厚度1-3mm

地址：广东省肇庆市高要区金利镇都播工业区　电话：13929897256　邮箱：526202547@qq.com
Add: Dubo Industrial Zone, Jinli Town, Gaoyao District, Zhaoqing City, Guangdong Province　TEL: 13929897256　Email: 526202547@qq.com

HL5036S

HL4026S

HL3218S

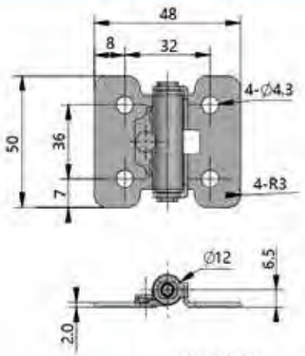

HL5036S

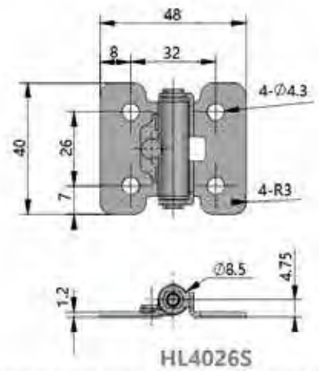

HL4026S

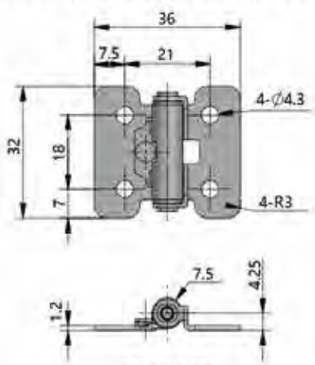

HL3218S

特征说明：

- 材　　质：SUS不锈钢
- 表面处理：SUS拉丝、镜面
- 结构功能：可调阻力明装铰链，通过螺丝调节阻力大小，螺丝固定安装简易方便快捷
- 用　　途：一般使用于机箱机柜、电箱电柜、机械设备、自动化设备钣金箱体使用
- 备　　注：适用门板厚度1-3mm

Feature Description:

Material: SUS stainless steel
Surface treatment: SUS wire drawing, mirror
Structural function: adjustable resistance exposed hinge, adjust the resistance through screws, screw fixing and installation is simple, convenient and fast
Uses: generally used in chassis cabinets, electrical cabinets, mechanical equipment, automation equipment sheet metal boxes
Remarks: Applicable door panel thickness 1–3mm

地址：广东省肇庆市高要区金利镇都播工业区　电话：13929897256　邮箱：526202547@qq.com
Add: Dubo Industrial Zone, Jinli Town, Gaoyao District, Zhaoqing City, Guangdong Province　TEL: 13929897256　Email: 526202547@qq.com

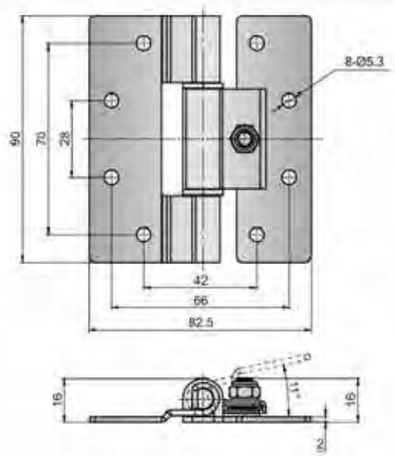

HL9070S

Feature Description:

Material: SUS stainless steel
Surface treatment: SUS wire drawing, mirror
Structural function: adjustable resistance exposed hinge, adjust the resistance through screws, screw fixing and installation is simple, convenient and fast
Uses: generally used in chassis cabinets, electrical cabinets, mechanical equipment, automation equipment sheet metal boxes
Remarks: Applicable door panel thickness 1–3mm

特征说明：

- 材　　质：SUS不锈钢
- 表面处理：SUS拉丝、镜面
- 结构功能：可调阻力明装铰链，通过螺丝调节阻力大小，螺丝固定安装简易方便快捷
- 用　　途：一般使用于机箱机柜、电箱电柜、机械设备、自动化设备钣金箱体使用
- 备　　注：适用门板厚度1-3mm

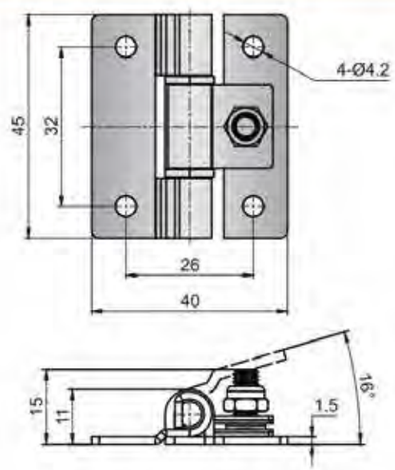

HL4532S

Feature Description:

Material: SUS stainless steel
Surface treatment: SUS wire drawing, mirror
Structural function: adjustable resistance exposed hinge, adjust the resistance through screws, screw fixing and installation is simple, convenient and fast
Uses: generally used in chassis cabinets, electrical cabinets, mechanical equipment, automation equipment sheet metal boxes
Remarks: Applicable door panel thickness 1–3mm

特征说明：

- 材　　质：SUS不锈钢
- 表面处理：SUS拉丝、镜面
- 结构功能：可调阻力明装铰链，通过螺丝调节阻力大小，螺丝固定安装简易方便快捷
- 用　　途：一般使用于机箱机柜、电箱电柜、机械设备、自动化设备钣金箱体使用
- 备　　注：适用门板厚度1-3mm

地址：广东省肇庆市高要区金利镇都播工业区　电话：13929897256　邮箱：526202547@qq.com
Add: Dubo Industrial Zone, Jinli Town, Gaoyao District, Zhaoqing City, Guangdong Province　TEL: 13929897256　Email: 526202547@qq.com

HL7033S

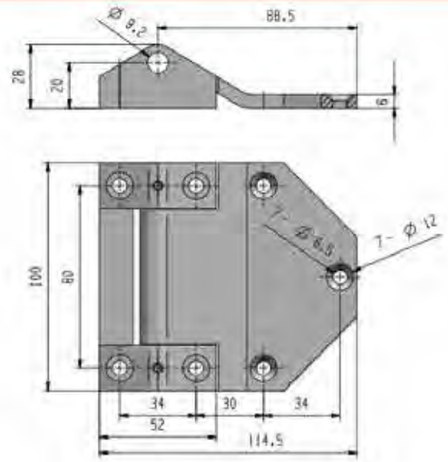

特征说明:

- 材　　质: SUS不锈钢
- 表面处理: SUS拉丝、镜面
- 结构功能: 明装铰链，通过螺丝固定，安装拆卸简易方便快捷
- 用　　途: 一般使用于机箱机柜、电箱电柜、机械设备、自动化设备钣金箱体使用
- 备　　注: 适用门板厚度1-3mm

Feature Description:

Material: SUS stainless steel
Surface treatment: SUS wire drawing, mirror
Structural function: exposed ammonium chain, fixed by screws, easy to install and disassemble Quick and easy
Uses: generally used in chassis cabinets, electrical cabinets, mechanical equipment, automation equipment sheet metal boxes
Remarks: Applicable door panel thickness 1–3mm

HL8034S

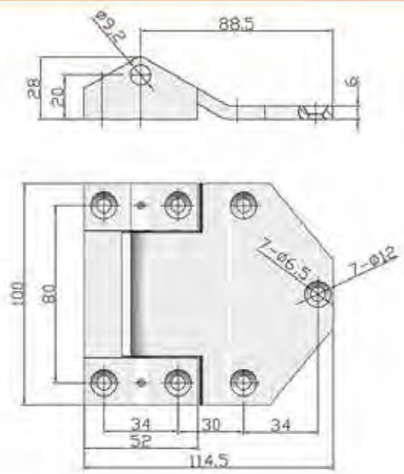

特征说明:

- 材　　质: SUS不锈钢
- 表面处理: SUS拉丝、镜面
- 结构功能: 明装铰链，通过螺丝固定，安装拆卸简易方便快捷
- 用　　途: 一般使用于机箱机柜、电箱电柜、机械设备、自动化设备钣金箱体使用
- 备　　注: 适用门板厚度1-3mm

Feature Description:

Material: SUS stainless steel
Surface treatment: SUS wire drawing, mirror
Structural function: exposed ammonium chain, fixed by screws, easy to install and disassemble Quick and easy
Uses: generally used in chassis cabinets, electrical cabinets, mechanical equipment, automation equipment sheet metal boxes
Remarks: Applicable door panel thickness 1–3mm

地址：广东省肇庆市高要区金利镇都播工业区　电话：13929897256　邮箱：526202547@qq.com
Add: Dubo Industrial Zone, Jinli Town, Gaoyao District, Zhaoqing City, Guangdong Province　TEL: 13929897256　Email: 526202547@qq.com

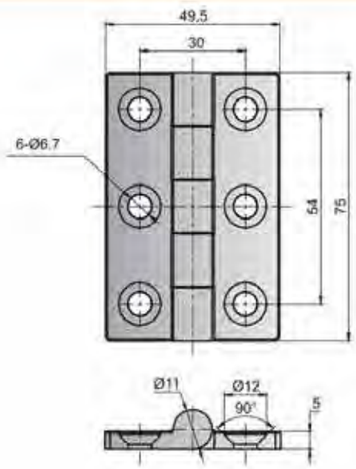

Feature Description:

Material: SUS stainless steel
Surface treatment: SUS wire drawing, mirror
Structural function: exposed ammonium chain, fixed by screws, easy to install and disassemble Quick and easy
Uses: generally used in chassis cabinets, electrical cabinets, mechanical equipment, automation equipment sheet metal boxes
Remarks: Applicable door panel thickness 1–3mm

HL7045S

特征说明:

- 材　　质: SUS不锈钢
- 表面处理: SUS拉丝、镜面
- 结构功能: 明装铰链，通过螺丝固定，安装拆卸简易方便快捷
- 用　　途: 一般使用于机箱机柜、电箱电柜、机械设备、自动化设备钣金箱体使用
- 备　　注: 适用门板厚度1-3mm

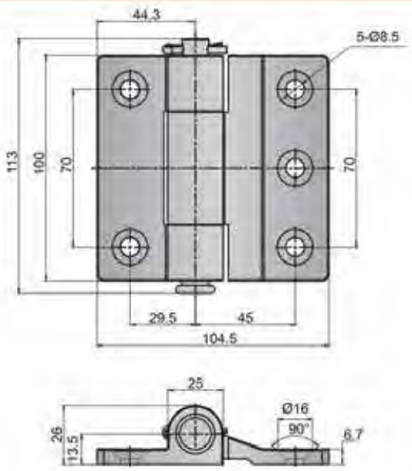

Feature Description:

Material: SUS stainless steel
Surface treatment: SUS wire drawing, mirror
Structural function: exposed ammonium chain, fixed by screws, easy to install and disassemble Quick and easy
Uses: generally used in chassis cabinets, electrical cabinets, mechanical equipment, automation equipment sheet metal boxes
Remarks: Applicable door panel thickness 1–3mm

HL1007S

特征说明:

- 材　　质: SUS不锈钢
- 表面处理: SUS拉丝、镜面
- 结构功能: 明装铰链，通过螺丝固定，安装拆卸简易方便快捷
- 用　　途: 一般使用于机箱机柜、电箱电柜、机械设备、自动化设备钣金箱体使用
- 备　　注: 适用门板厚度1-3mm

把手锁 Handle lock
圆柱锁 Cylinder lock
平面锁 Plane lock
连杆锁 Rod control lock
面板锁 Panel lock
搭扣锁 Tonggle and hook
拉手 Handles
限位 Door stop
铰链 Hinge
冷库把手 Handle latch
磁吸 Magnet catch
附件 Accessories

地址：广东省肇庆市高要区金利镇都播工业区　电话：13929897256　邮箱：526202547@qq.com
Add: Dubo Industrial Zone, Jinli Town, Gaoyao District, Zhaoqing City, Guangdong Province　TEL: 13929897256　Email: 526202547@qq.com

HL9030S

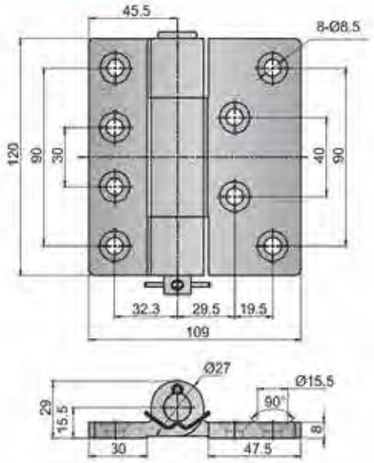

特征说明:

- 材　　质：SUS不锈钢
- 表面处理：SUS拉丝、镜面
- 结构功能：明装铰链，通过螺丝固定，安装拆卸简易方便快捷
- 用　　途：一般使用于机箱机柜、电箱电柜、机械设备、自动化设备钣金箱体使用
- 备　　注：适用门板厚度1-3mm

Feature Description:

Material: SUS stainless steel
Surface treatment: SUS wire drawing, mirror
Structural function: exposed ammonium chain, fixed by screws, easy to install and disassemble Quick and easy
Uses: generally used in chassis cabinets, electrical cabinets, mechanical equipment, automation equipment sheet metal boxes
Remarks: Applicable door panel thickness 1–3mm

HL3825S

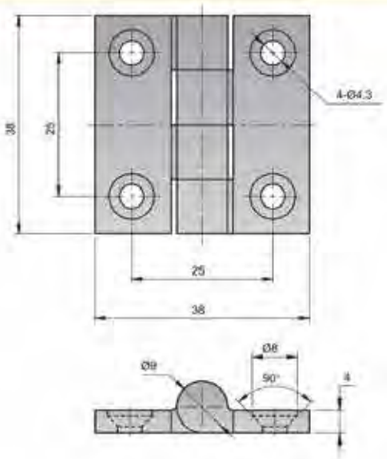

特征说明:

- 材　　质：SUS不锈钢
- 表面处理：SUS拉丝、镜面
- 结构功能：明装铰链，通过螺丝固定，安装拆卸简易方便快捷
- 用　　途：一般使用于机箱机柜、电箱电柜、机械设备、自动化设备钣金箱体使用
- 备　　注：适用门板厚度1-3mm

Feature Description:

Material: SUS stainless steel
Surface treatment: SUS wire drawing, mirror
Structural function: exposed ammonium chain, fixed by screws, easy to install and disassemble Quick and easy
Uses: generally used in chassis cabinets, electrical cabinets, mechanical equipment, automation equipment sheet metal boxes
Remarks: Applicable door panel thickness 1–3mm

地址：广东省肇庆市高要区金利镇都播工业区　电话：13929897256　邮箱：526202547@qq.com
Add: Dubo Industrial Zone, Jinli Town, Gaoyao District, Zhaoqing City, Guangdong Province　TEL: 13929897256　Email: 526202547@qq.com

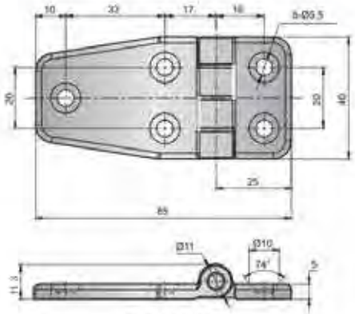

HL4020S

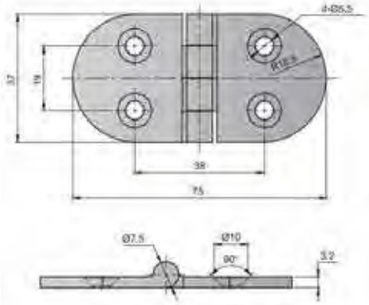

HL3719S

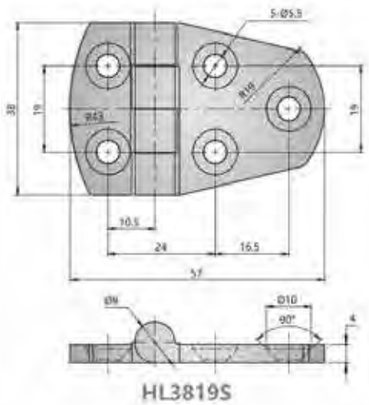

HL3819S

HL4020S

HL3719S

HL3819S

Feature Description:

Material: SUS stainless steel
Surface treatment: SUS wire drawing, mirror
Structural function: exposed ammonium chain, fixed by screws, easy to install and disassemble Quick and easy
Uses: generally used in chassis cabinets, electrical cabinets, mechanical equipment, automation equipment sheet metal boxes
Remarks: Applicable door panel thickness 1–3mm

特征说明:

- 材　　质：SUS不锈钢
- 表面处理：SUS拉丝、镜面
- 结构功能：明装铰链，通过螺丝固定，安装拆卸简易方便快捷
- 用　　途：一般使用于机箱机柜、电箱电柜、机械设备、自动化设备钣金箱体使用
- 备　　注：适用门板厚度1-3mm

把手锁 Handle lock
圆柱锁 Cylinder lock
平面锁 Plane lock
连杆锁 Rod control lock
面板锁 Panel lock
搭扣锁 Tonggle and hook
拉手 Handles
限位 Door stop
铰链 Hinge
冷库把手 Handle latch
磁吸 Magnet catch
附件 Accessories

地址：广东省肇庆市高要区金利镇都播工业区　电话：13929897256　邮箱：526202547@qq.com
Add: Dubo Industrial Zone, Jinli Town, Gaoyao District, Zhaoqing City, Guangdong Province　TEL: 13929897256　Email: 526202547@qq.com

把手锁 Handle lock
圆柱锁 Cylinder lock
平面锁 Plane lock
连杆锁 Rod control lock
面板锁 Panel lock
搭扣锁 Tonggle and hook
拉手 Handles
限位 Door stop
铰链 Hinge
冷库把手 Handle latch
磁吸 Magnet catch
附件 Accessories

HL2635-1321

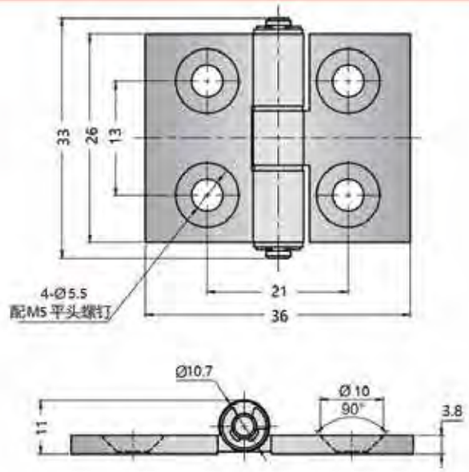

特征说明:

- 材　　质：SUS不锈钢主体，SUS卡簧，铜轴，POM衬套
- 表面处理：ADC/SUS，砂面，镜面，黑色，白色
- 结构功能：铰链轴心设计零缝隙，保证门板安装精度，内置衬套，防止摩擦产生尘粉，具有静音，承重，轻阻力
- 用　　途：一般适用于检测设备，环保，半导体，视觉检测，锂电，食品设备等自动化钣金框架
- 备　　注：不受门板厚度限制

Feature Description:

Material: SUS stainless steel body, SUS circlip, pin shaft, POM bushing
Surface treatment: ADC/SUS, sand, mirror, black, white
Structural function: hinge shaft design zero gap, to ensure the installation accuracy of the door panel, built-in bushing, to prevent friction from dust, with silent, load-bearing and light resistance
Uses: Generally suitable for testing equipment, environmental protection, semiconductors, visual inspection, lithium batteries, food equipment and other automated sheet metal frames
Remarks: Not limited by door panel thickness

HL2647-1332

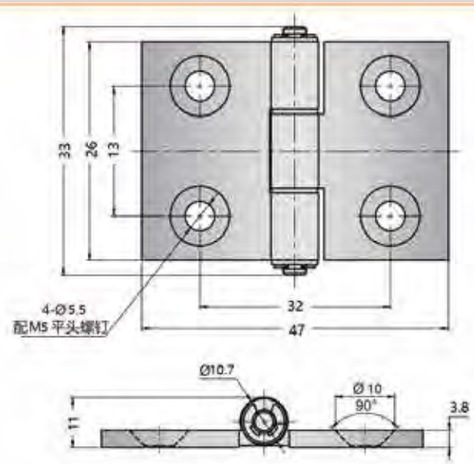

特征说明:

- 材　　质：SUS不锈钢主体，SUS卡簧，铜轴，POM衬套
- 表面处理：ADC/SUS，砂面，镜面，黑色，白色
- 结构功能：铰链轴心设计零缝隙，保证门板安装精度，内置衬套，防止摩擦产生尘粉，具有静音，承重，轻阻力
- 用　　途：一般适用于检测设备，环保，半导体，视觉检测，锂电，食品设备等自动化钣金框架
- 备　　注：不受门板厚度限制

Feature Description:

Material: SUS stainless steel body, SUS circlip, pin shaft, POM bushing
Surface treatment: ADC/SUS, sand, mirror, black, white
Structural function: hinge shaft design zero gap, to ensure the installation accuracy of the door panel, built-in bushing, to prevent friction from dust, with silent, load-bearing and light resistance
Uses: Generally suitable for testing equipment, environmental protection, semiconductors, visual inspection, lithium batteries, food equipment and other automated sheet metal frames
Remarks: Not limited by door panel thickness

地址：广东省肇庆市高要区金利镇都播工业区　电话：13929897256　邮箱：526202547@qq.com
Add: Dubo Industrial Zone, Jinli Town, Gaoyao District, Zhaoqing City, Guangdong Province　TEL: 13929897256　Email: 526202547@qq.com

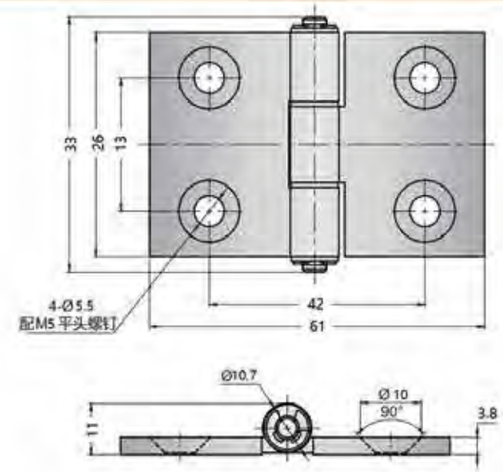

Feature Description:

Material: SUS stainless steel body, SUS circlip, pin shaft, POM bushing
Surface treatment: ADC/SUS, sand, mirror, black, white
Structural function: hinge shaft design zero gap, to ensure the installation accuracy of the door panel, built-in bushing, to prevent friction from dust, with silent, load-bearing and light resistance
Uses: Generally suitable for testing equipment, environmental protection, semiconductors, visual inspection, lithium batteries, food equipment and other automated sheet metal frames
Remarks: Not limited by door panel thickness

HL2661-1342

特征说明:

- 材　　质：SUS不锈钢主体，SUS卡簧，铜轴，POM衬套
- 表面处理：ADC/SUS，砂面，镜面，黑色，白色
- 结构功能：铰链轴心设计零缝隙，保证门板安装精度，内置衬套，防止摩擦产生尘粉，具有静音，承重，轻阻力
- 用　　途：一般适用于检测设备，环保，半导体，视觉检测，锂电，食品设备等自动化钣金框架
- 备　　注：不受门板厚度限制

Feature Description:

Material: SUS stainless steel body, SUS circlip, pin shaft, POM bushing
Surface treatment: ADC/SUS, sand, mirror, black, white
Structural function: hinge shaft design zero gap, to ensure the installation accuracy of the door panel, built-in bushing, to prevent friction from dust, with silent, load-bearing and light resistance
Uses: Generally suitable for testing equipment, environmental protection, semiconductors, visual inspection, lithium batteries, food equipment and other automated sheet metal frames
Remarks: Not limited by door panel thickness

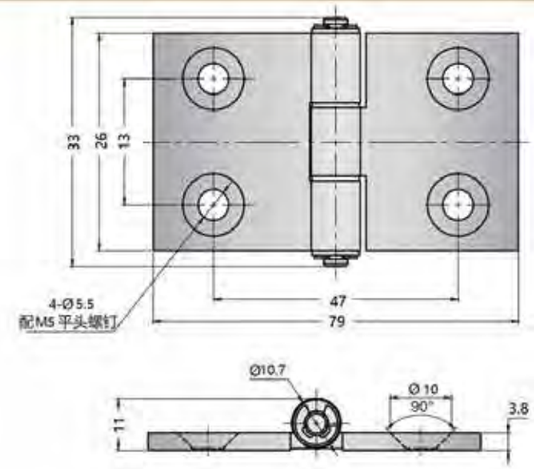

HL2679-1347

特征说明:

- 材　　质：SUS不锈钢主体，SUS卡簧，铜轴，POM衬套
- 表面处理：ADC/SUS，砂面，镜面，黑色，白色
- 结构功能：铰链轴心设计零缝隙，保证门板安装精度，内置衬套，防止摩擦产生尘粉，具有静音，承重，轻阻力
- 用　　途：一般适用于检测设备，环保，半导体，视觉检测，锂电，食品设备等自动化钣金框架
- 备　　注：不受门板厚度限制

Feature Description:

Material: SUS stainless steel body, SUS circlip, pin shaft, POM bushing
Surface treatment: ADC/SUS, sand, mirror, black, white
Structural function: hinge shaft design zero gap, to ensure the installation accuracy of the door panel, built-in bushing, to prevent friction from dust, with silent, load-bearing and light resistance
Uses: Generally suitable for testing equipment, environmental protection, semiconductors, visual inspection, lithium batteries, food equipment and other automated sheet metal frames
Remarks: Not limited by door panel thickness

地址：广东省肇庆市高要区金利镇都播工业区　电话：13929897256　邮箱：526202547@qq.com
Add: Dubo Industrial Zone, Jinli Town, Gaoyao District, Zhaoqing City, Guangdong Province　TEL: 13929897256　Email: 526202547@qq.com

把手锁 Handle lock
圆柱锁 Cylinder lock
平面锁 Plane lock
连杆锁 Rod control lock
面板锁 Panel lock
搭扣锁 Tonggle and hook

HL4747-3030三节

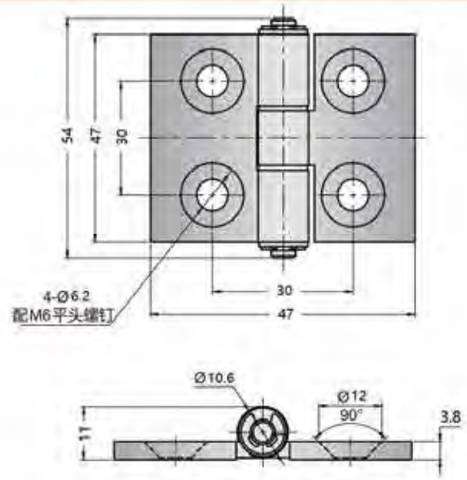

特征说明:

- 材　　质：SUS不锈钢主体，SUS卡簧，钢轴，POM衬套
- 表面处理：ADC/SUS，砂面、镜面、黑色、白色
- 结构功能：铰链轴心设计零缝隙，保证门板安装精度，内置衬套，防止摩擦产生尘粉，具有静音、承重、轻阻力
- 用　　途：一般适用于检测设备，环保、半导体、视觉检测、锂电、食品设备等自动化板金框架
- 备　　注：不受门板厚度限制

Feature Description:

Material: SUS stainless steel body, SUS circlip, pin shaft, POM bushing
Surface treatment: ADC/SUS, sand, mirror, black, white
Structural function: hinge shaft design zero gap, to ensure the installation accuracy of the door panel, built-in bushing, to prevent friction from dust, with silent, load-bearing and light resistance
Uses: Generally suitable for testing equipment, environmental protection, semiconductors, visual inspection, lithium batteries, food equipment and other automated sheet metal frames
Remarks: Not limited by door panel thickness

拉手 Handles
限位 Door stop
铰链 Hinge
冷库把手 Handle latch
磁吸 Magnet catch
附件 Accessories

HL4747-3030四节

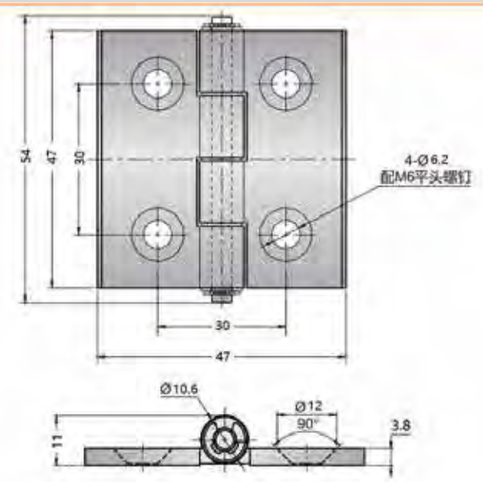

特征说明:

- 材　　质：SUS不锈钢主体，SUS卡簧，钢轴，POM衬套
- 表面处理：ADC/SUS，砂面、镜面、黑色、白色
- 结构功能：铰链轴心设计零缝隙，保证门板安装精度，内置衬套，防止摩擦产生尘粉，具有静音、承重、轻阻力
- 用　　途：一般适用于检测设备，环保、半导体、视觉检测、锂电、食品设备等自动化板金框架
- 备　　注：不受门板厚度限制

Feature Description:

Material: SUS stainless steel body, SUS circlip, pin shaft, POM bushing
Surface treatment: ADC/SUS, sand, mirror, black, white
Structural function: hinge shaft design zero gap, to ensure the installation accuracy of the door panel, built-in bushing, to prevent friction from dust, with silent, load-bearing and light resistance
Uses: Generally suitable for testing equipment, environmental protection, semiconductors, visual inspection, lithium batteries, food equipment and other automated sheet metal frames
Remarks: Not limited by door panel thickness

地址：广东省肇庆市高要区金利镇都播工业区　电话：13929897256　邮箱：526202547@qq.com
Add: Dubo Industrial Zone, Jinli Town, Gaoyao District, Zhaoqing City, Guangdong Province　TEL: 13929897256　Email: 526202547@qq.com

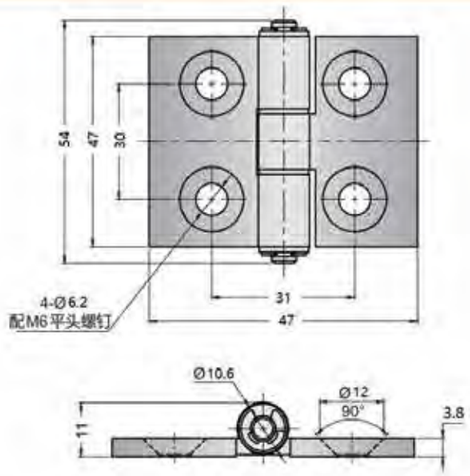

Feature Description:

Material: SUS stainless steel body, SUS circlip, pin shaft, POM bushing
Surface treatment: ADC/SUS, sand, mirror, black, white
Structural function: hinge shaft design zero gap, to ensure the installation accuracy of the door panel, built-in bushing, to prevent friction from dust, with silent, load-bearing and light resistance
Uses: Generally suitable for testing equipment, environmental protection, semiconductors, visual inspection, lithium batteries, food equipment and other automated sheet metal frames
Remarks: Not limited by door panel thickness

HL4747-3031三节

特征说明:

- 材　　质：SUS不锈钢主体，SUS卡簧，钢轴，POM衬套
- 表面处理：ADC/SUS，砂面、镜面、黑色、白色
- 结构功能：铰链轴心设计零缝隙，保证门板安装精度，内置衬套，防止摩擦产生尘粉，具有静音、承重、轻阻力
- 用　　途：一般适用于检测设备，环保、半导体、视觉检测、锂电、食品设备等自动化板金框架
- 备　　注：不受门板厚度限制

Feature Description:

Material: SUS stainless steel body, SUS circlip, pin shaft, POM bushing
Surface treatment: ADC/SUS, sand, mirror, black, white
Structural function: hinge shaft design zero gap, to ensure the installation accuracy of the door panel, built-in bushing, to prevent friction from dust, with silent, load-bearing and light resistance
Uses: Generally suitable for testing equipment, environmental protection, semiconductors, visual inspection, lithium batteries, food equipment and other automated sheet metal frames
Remarks: Not limited by door panel thickness

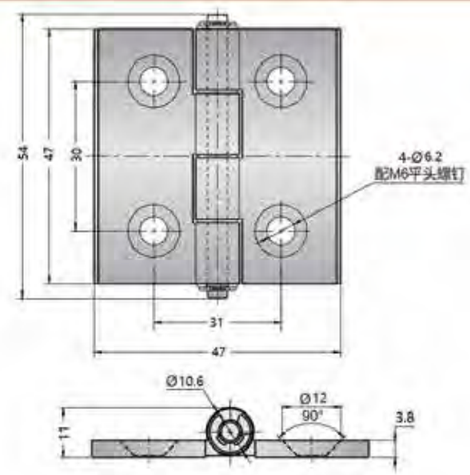

HL4747-3031四节

特征说明:

- 材　　质：SUS不锈钢主体，SUS卡簧，钢轴，POM衬套
- 表面处理：ADC/SUS，砂面、镜面、黑色、白色
- 结构功能：铰链轴心设计零缝隙，保证门板安装精度，内置衬套，防止摩擦产生尘粉，具有静音、承重、轻阻力
- 用　　途：一般适用于检测设备，环保、半导体、视觉检测、锂电、食品设备等自动化板金框架
- 备　　注：不受门板厚度限制

Feature Description:

Material: SUS stainless steel body, SUS circlip, pin shaft, POM bushing
Surface treatment: ADC/SUS, sand, mirror, black, white
Structural function: hinge shaft design zero gap, to ensure the installation accuracy of the door panel, built-in bushing, to prevent friction from dust, with silent, load-bearing and light resistance
Uses: Generally suitable for testing equipment, environmental protection, semiconductors, visual inspection, lithium batteries, food equipment and other automated sheet metal frames
Remarks: Not limited by door panel thickness

地址：广东省肇庆市高要区金利镇都播工业区　电话：13929897256　邮箱：526202547@qq.com
Add: Dubo Industrial Zone, Jinli Town, Gaoyao District, Zhaoqing City, Guangdong Province　TEL: 13929897256　Email: 526202547@qq.com

HL4747-3032三节

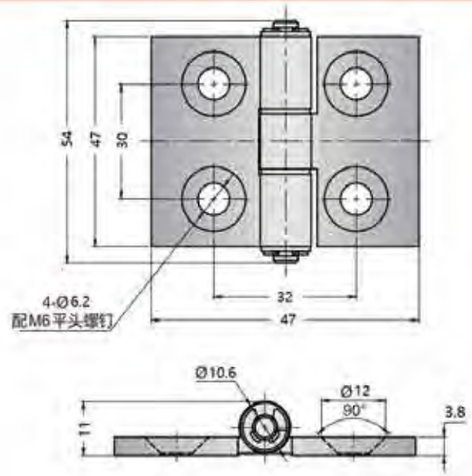

特征说明:

- 材　　质：SUS不锈钢主体，SUS卡簧，销轴，POM衬套
- 表面处理：ADC/SUS，砂面、镜面、黑色、白色
- 结构功能：铰链轴心设计零缝隙，保证门板安装精度，内置衬套，防止摩擦产生尘粉，具有静音，承重，轻阻力
- 用　　途：一般适用于检测设备，环保，半导体，视觉检测，锂电，食品设备等自动化钣金框架
- 备　　注：不受门板厚度限制

Feature Description:

Material: SUS stainless steel body, SUS circlip, pin shaft, POM bushing
Surface treatment: ADC/SUS, sand, mirror, black, white
Structural function: hinge shaft design zero gap, to ensure the installation accuracy of the door panel, built-in bushing, to prevent friction from dust, with silent, load-bearing and light resistance
Uses: Generally suitable for testing equipment, environmental protection, semiconductors, visual inspection, lithium batteries, food equipment and other automated sheet metal frames
Remarks: Not limited by door panel thickness

HL4747-3032四节

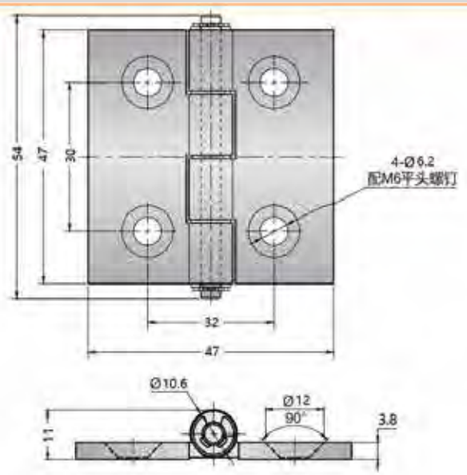

特征说明:

- 材　　质：SUS不锈钢主体，SUS卡簧，销轴，POM衬套
- 表面处理：ADC/SUS，砂面、镜面、黑色、白色
- 结构功能：铰链轴心设计零缝隙，保证门板安装精度，内置衬套，防止摩擦产生尘粉，具有静音，承重，轻阻力
- 用　　途：一般适用于检测设备，环保，半导体，视觉检测，锂电，食品设备等自动化钣金框架
- 备　　注：不受门板厚度限制

Feature Description:

Material: SUS stainless steel body, SUS circlip, pin shaft, POM bushing
Surface treatment: ADC/SUS, sand, mirror, black, white
Structural function: hinge shaft design zero gap, to ensure the installation accuracy of the door panel, built-in bushing, to prevent friction from dust, with silent, load-bearing and light resistance
Uses: Generally suitable for testing equipment, environmental protection, semiconductors, visual inspection, lithium batteries, food equipment and other automated sheet metal frames
Remarks: Not limited by door panel thickness

地址：广东省肇庆市高要区金利镇都播工业区　电话：13929897256　邮箱：526202547@qq.com
Add: Dubo Industrial Zone, Jinli Town, Gaoyao District, Zhaoqing City, Guangdong Province　TEL: 13929897256　Email: 526202547@qq.com

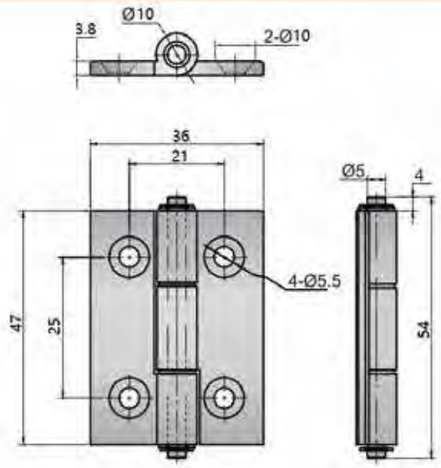

Feature Description:

Material: SUS stainless steel body, SUS circlip, pin shaft, POM bushing
Surface treatment: ADC/SUS, sand, mirror, black, white
Structural function: hinge shaft design zero gap, to ensure the installation accuracy of the door panel, built-in bushing, to prevent friction from dust, with silent, load-bearing and light resistance
Uses: Generally suitable for testing equipment, environmental protection, semiconductors, visual inspection, lithium batteries, food equipment and other automated sheet metal frames
Remarks: Not limited by door panel thickness

HL3547-2125

特征说明:

- 材　　质：SUS不锈钢主体，SUS卡簧，销轴，POM衬套
- 表面处理：ADC/SUS，砂面、镜面、黑色、白色
- 结构功能：铰链轴心设计零缝隙，保证门板安装精度，内置衬套，防止摩擦产生尘粉，具有静音，承重，轻阻力
- 用　　途：一般适用于检测设备，环保，半导体，视觉检测，锂电，食品设备等自动化钣金框架
- 备　　注：不受门板厚度限制

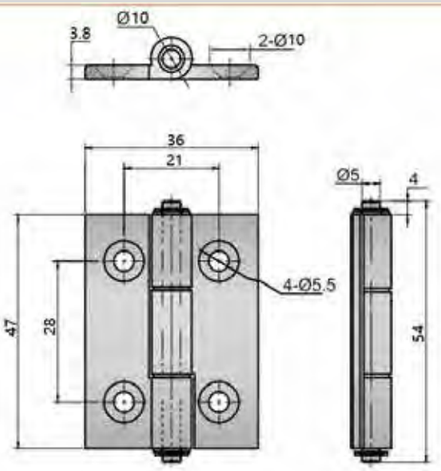

Feature Description:

Material: SUS stainless steel body, SUS circlip, pin shaft, POM bushing
Surface treatment: ADC/SUS, sand, mirror, black, white
Structural function: hinge shaft design zero gap, to ensure the installation accuracy of the door panel, built-in bushing, to prevent friction from dust, with silent, load-bearing and light resistance
Uses: Generally suitable for testing equipment, environmental protection, semiconductors, visual inspection, lithium batteries, food equipment and other automated sheet metal frames
Remarks: Not limited by door panel thickness

HL3547-2128

特征说明:

- 材　　质：SUS不锈钢主体，SUS卡簧，销轴，POM衬套
- 表面处理：ADC/SUS，砂面、镜面、黑色、白色
- 结构功能：铰链轴心设计零缝隙，保证门板安装精度，内置衬套，防止摩擦产生尘粉，具有静音，承重，轻阻力
- 用　　途：一般适用于检测设备，环保，半导体，视觉检测，锂电，食品设备等自动化钣金框架
- 备　　注：不受门板厚度限制

Feature Description:

Material: SUS stainless steel body, SUS circlip, pin shaft, POM bushing
Surface treatment: ADC/SUS, sand, mirror, black, white
Structural function: hinge shaft design zero gap, to ensure the installation accuracy of the door panel, built-in bushing, to prevent friction from dust, with silent, load-bearing and light resistance
Uses: Generally suitable for testing equipment, environmental protection, semiconductors, visual inspection, lithium batteries, food equipment and other automated sheet metal frames
Remarks: Not limited by door panel thickness

地址：广东省肇庆市高要区金利镇都播工业区　电话：13929897256　邮箱：526202547@qq.com
Add: Dubo Industrial Zone, Jinli Town, Gaoyao District, Zhaoqing City, Guangdong Province　TEL: 13929897256　Email: 526202547@qq.com

把手锁 Handle lock
圆柱锁 Cylinder lock
平面锁 Plane lock
连杆锁 Rod control lock
面板锁 Panel lock
搭扣锁 Tonggle and hook
拉手 Handles
限位 Door stop
铰链 Hinge
冷库把手 Handle latch
磁吸 Magnet catch
附件 Accessories

HL5060-3031

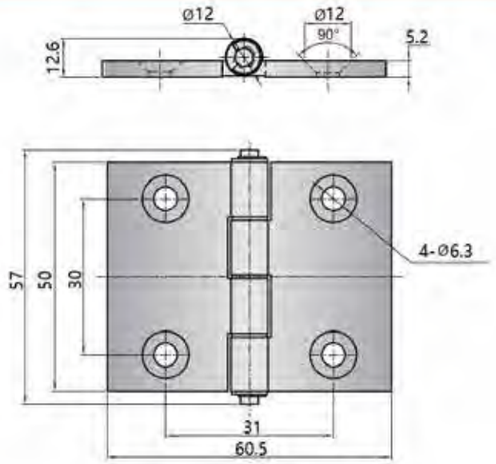

特征说明:

- 材　　质：SUS不锈钢主体，SUS卡簧，铜轴，POM衬套
- 表面处理：ADC/SUS，砂面、镜面、黑色、白色
- 结构功能：铰链轴心设计零缝隙，保证门板安装精度，内置衬套，防止摩擦产生尘粉，具有静音，承重，轻阻力
- 用　　途：一般适用于检测设备，环保，半导体，视觉检测，锂电，食品设备等自动化钣金框架
- 备　　注：不受门板厚度限制

Feature Description:

Material: SUS stainless steel body, SUS circlip, pin shaft, POM bushing
Surface treatment: ADC/SUS, sand, mirror, black, white
Structural function: hinge shaft design zero gap, to ensure the installation accuracy of the door panel, built-in bushing, to prevent friction from dust, with silent, load-bearing and light resistance
Uses: Generally suitable for testing equipment, environmental protection, semiconductors, visual inspection, lithium batteries, food equipment and other automated sheet metal frames
Remarks: Not limited by door panel thickness

HL5060-3036

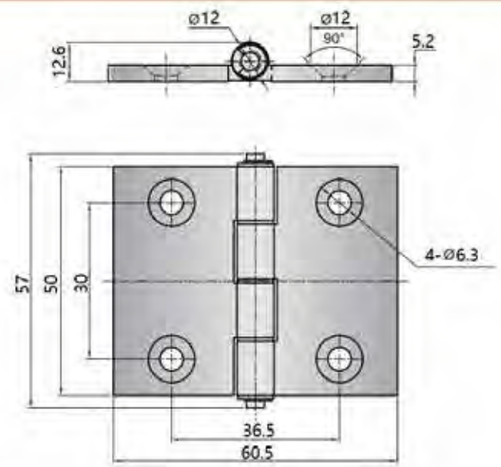

特征说明:

- 材　　质：SUS不锈钢主体，SUS卡簧，铜轴，POM衬套
- 表面处理：ADC/SUS，砂面、镜面、黑色、白色
- 结构功能：铰链轴心设计零缝隙，保证门板安装精度，内置衬套，防止摩擦产生尘粉，具有静音，承重，轻阻力
- 用　　途：一般适用于检测设备，环保，半导体，视觉检测，锂电，食品设备等自动化钣金框架
- 备　　注：不受门板厚度限制

Feature Description:

Material: SUS stainless steel body, SUS circlip, pin shaft, POM bushing
Surface treatment: ADC/SUS, sand, mirror, black, white
Structural function: hinge shaft design zero gap, to ensure the installation accuracy of the door panel, built-in bushing, to prevent friction from dust, with silent, load-bearing and light resistance
Uses: Generally suitable for testing equipment, environmental protection, semiconductors, visual inspection, lithium batteries, food equipment and other automated sheet metal frames
Remarks: Not limited by door panel thickness

地址：广东省肇庆市高要区金利镇都播工业区　电话：13929897256　邮箱：526202547@qq.com
Add: Dubo Industrial Zone, Jinli Town, Gaoyao District, Zhaoqing City, Guangdong Province　TEL: 13929897256　Email: 526202547@qq.com

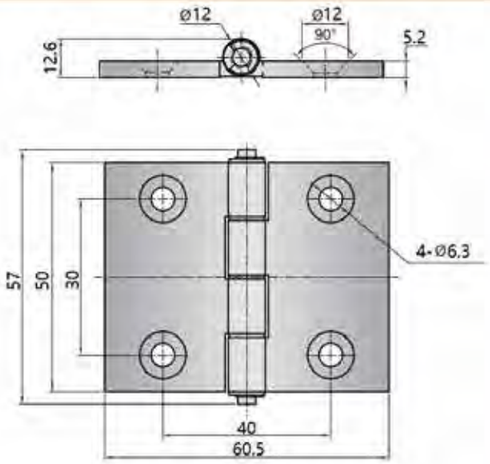

Feature Description:

Material: SUS stainless steel body, SUS circlip, pin shaft, POM bushing
Surface treatment: ADC/SUS, sand, mirror, black, white
Structural function: hinge shaft design zero gap, to ensure the installation accuracy of the door panel, built-in bushing, to prevent friction from dust, with silent, load-bearing and light resistance
Uses: Generally suitable for testing equipment, environmental protection, semiconductors, visual inspection, lithium batteries, food equipment and other automated sheet metal frames
Remarks: Not limited by door panel thickness

HL5060-3040

特征说明:

- 材　　质：SUS不锈钢主体，SUS卡簧，铜轴，POM衬套
- 表面处理：ADC/SUS，砂面、镜面、黑色、白色
- 结构功能：铰链轴心设计零缝隙，保证门板安装精度，内置衬套，防止摩擦产生尘粉，具有静音，承重，轻阻力
- 用　　途：一般适用于检测设备，环保，半导体，视觉检测，锂电，食品设备等自动化钣金框架
- 备　　注：不受门板厚度限制

Feature Description:

Material: SUS stainless steel body, SUS circlip, pin shaft, POM bushing
Surface treatment: ADC/SUS, sand, mirror, black, white
Structural function: hinge shaft design zero gap, to ensure the installation accuracy of the door panel, built-in bushing, to prevent friction from dust, with silent, load-bearing and light resistance
Uses: Generally suitable for testing equipment, environmental protection, semiconductors, visual inspection, lithium batteries, food equipment and other automated sheet metal frames
Remarks: Not limited by door panel thickness

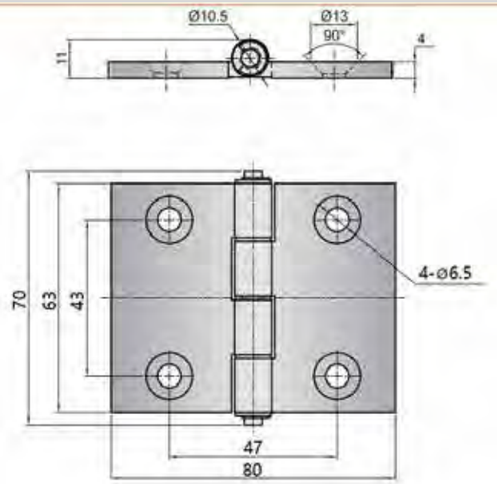

Feature Description:

Material: SUS stainless steel body, SUS circlip, pin shaft, POM bushing
Surface treatment: ADC/SUS, sand, mirror, black, white
Structural function: hinge shaft design zero gap, to ensure the installation accuracy of the door panel, built-in bushing, to prevent friction from dust, with silent, load-bearing and light resistance
Uses: Generally suitable for testing equipment, environmental protection, semiconductors, visual inspection, lithium batteries, food equipment and other automated sheet metal frames
Remarks: Not limited by door panel thickness

HL6379-4347

特征说明:

- 材　　质：SUS不锈钢主体，SUS卡簧，铜轴，POM衬套
- 表面处理：ADC/SUS，砂面、镜面、黑色、白色
- 结构功能：铰链轴心设计零缝隙，保证门板安装精度，内置衬套，防止摩擦产生尘粉，具有静音，承重，轻阻力
- 用　　途：一般适用于检测设备，环保，半导体，视觉检测，锂电，食品设备等自动化钣金框架
- 备　　注：不受门板厚度限制

地址：广东省肇庆市高要区金利镇都播工业区　电话：13929897256　邮箱：526202547@qq.com
Add: Dubo Industrial Zone, Jinli Town, Gaoyao District, Zhaoqing City, Guangdong Province　TEL: 13929897256　Email: 526202547@qq.com

HL6147-2836

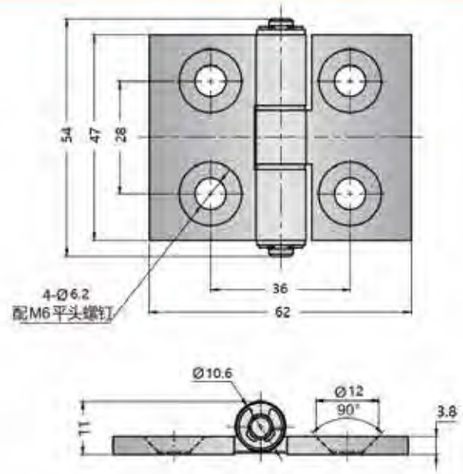

特征说明：

- 材　　质：SUS不锈钢主体，SUS卡簧，钢轴，POM衬套
- 表面处理：ADC/SUS，砂面、镜面、黑色、白色
- 结构功能：铰链轴心设计零缝隙，保证门板安装精度，内置衬套，防止摩擦产生尘粉，具有静音，承重，轻阻力
- 用　　途：一般适用于检测设备、环保、半导体、视觉检测、锂电、食品设备等自动化钣金框架
- 备　　注：不受门板厚度限制

Feature Description:

Material: SUS stainless steel body, SUS circlip, pin shaft, POM bushing
Surface treatment: ADC/SUS, sand, mirror, black, white
Structural function: hinge shaft design zero gap, to ensure the installation accuracy of the door panel, built-in bushing, to prevent friction from dust, with silent, load-bearing and light resistance
Uses: Generally suitable for testing equipment, environmental protection, semiconductors, visual inspection, lithium batteries, food equipment and other automated sheet metal frames
Remarks: Not limited by door panel thickness

HL6147-3036

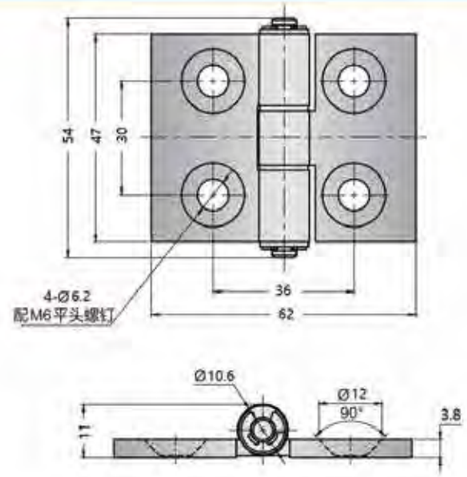

特征说明：

- 材　　质：SUS不锈钢主体，SUS卡簧，钢轴，POM衬套
- 表面处理：ADC/SUS，砂面、镜面、黑色、白色
- 结构功能：铰链轴心设计零缝隙，保证门板安装精度，内置衬套，防止摩擦产生尘粉，具有静音，承重，轻阻力
- 用　　途：一般适用于检测设备、环保、半导体、视觉检测、锂电、食品设备等自动化钣金框架
- 备　　注：不受门板厚度限制

Feature Description:

Material: SUS stainless steel body, SUS circlip, pin shaft, POM bushing
Surface treatment: ADC/SUS, sand, mirror, black, white
Structural function: hinge shaft design zero gap, to ensure the installation accuracy of the door panel, built-in bushing, to prevent friction from dust, with silent, load-bearing and light resistance
Uses: Generally suitable for testing equipment, environmental protection, semiconductors, visual inspection, lithium batteries, food equipment and other automated sheet metal frames
Remarks: Not limited by door panel thickness

地址：广东省肇庆市高要区金利镇都播工业区　电话：13929897256　邮箱：526202547@qq.com
Add: Dubo Industrial Zone, Jinli Town, Gaoyao District, Zhaoqing City, Guangdong Province　TEL: 13929897256　Email: 526202547@qq.com

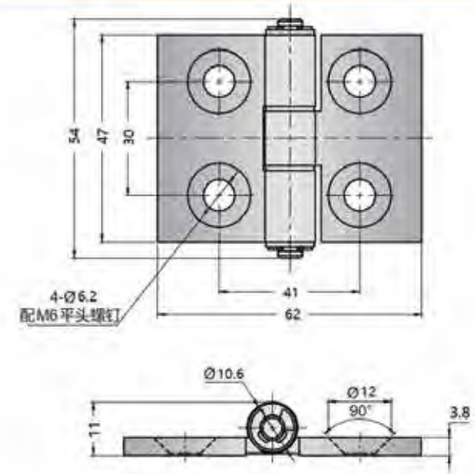

Feature Description:

Material: SUS stainless steel body, SUS circlip, pin shaft, POM bushing
Surface treatment: ADC/SUS, sand, mirror, black, white
Structural function: hinge shaft design zero gap, to ensure the installation accuracy of the door panel, built-in bushing, to prevent friction from dust, with silent, load-bearing and light resistance
Uses: Generally suitable for testing equipment, environmental protection, semiconductors, visual inspection, lithium batteries, food equipment and other automated sheet metal frames
Remarks: Not limited by door panel thickness

HL6147-3041

特征说明：

- 材　　质：SUS不锈钢主体，SUS卡簧，钢轴，POM衬套
- 表面处理：ADC/SUS，砂面、镜面、黑色、白色
- 结构功能：铰链轴心设计零缝隙，保证门板安装精度，内置衬套，防止摩擦产生尘粉，具有静音，承重，轻阻力
- 用　　途：一般适用于检测设备、环保、半导体、视觉检测、锂电、食品设备等自动化钣金框架
- 备　　注：不受门板厚度限制

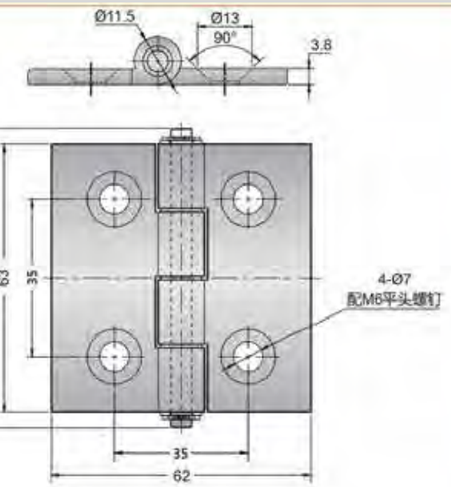

Feature Description:

Material: SUS stainless steel body, SUS circlip, pin shaft, POM bushing
Surface treatment: ADC/SUS, sand, mirror, black, white
Structural function: hinge shaft design zero gap, to ensure the installation accuracy of the door panel, built-in bushing, to prevent friction from dust, with silent, load-bearing and light resistance
Uses: Generally suitable for testing equipment, environmental protection, semiconductors, visual inspection, lithium batteries, food equipment and other automated sheet metal frames
Remarks: Not limited by door panel thickness

HL6163-3535

特征说明：

- 材　　质：SUS不锈钢主体，SUS卡簧，钢轴，POM衬套
- 表面处理：ADC/SUS，砂面、镜面、黑色、白色
- 结构功能：铰链轴心设计零缝隙，保证门板安装精度，内置衬套，防止摩擦产生尘粉，具有静音，承重，轻阻力
- 用　　途：一般适用于检测设备、环保、半导体、视觉检测、锂电、食品设备等自动化钣金框架
- 备　　注：不受门板厚度限制

地址：广东省肇庆市高要区金利镇都播工业区　电话：13929897256　邮箱：526202547@qq.com
Add: Dubo Industrial Zone, Jinli Town, Gaoyao District, Zhaoqing City, Guangdong Province　TEL: 13929897256　Email: 526202547@qq.com

HL6163-3737

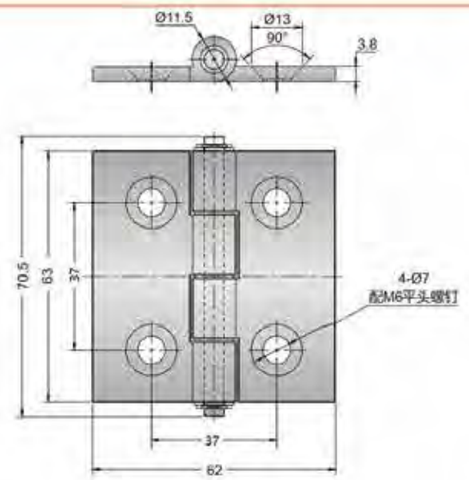

特征说明：

- 材　　质：SUS不锈钢主体，SUS卡簧，钢轴，POM衬套
- 表面处理：ADC/SUS，砂面、镜面，黑色、白色
- 结构功能：铰链轴心设计零缝隙，保证门板安装精度，内置衬套，防止摩擦产生尘粉，具有静音、承重、轻阻力
- 用　　途：一般适用于检测设备、环保、半导体、视觉检测、锂电、食品设备等自动化钣金框架
- 备　　注：不受门板厚度限制

Feature Description:

Material: SUS stainless steel body, SUS circlip, pin shaft, POM bushing
Surface treatment: ADC/SUS, sand, mirror, black, white
Structural function: hinge shaft design zero gap, to ensure the installation accuracy of the door panel, built-in bushing, to prevent friction from dust, with silent, load-bearing and light resistance
Uses: Generally suitable for testing equipment, environmental protection, semiconductors, visual inspection, lithium batteries, food equipment and other automated sheet metal frames
Remarks: Not limited by door panel thickness

HL6163-3540

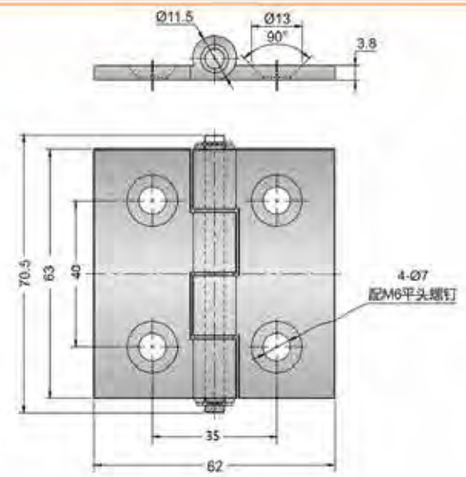

特征说明：

- 材　　质：SUS不锈钢主体，SUS卡簧，钢轴，POM衬套
- 表面处理：ADC/SUS，砂面、镜面，黑色、白色
- 结构功能：铰链轴心设计零缝隙，保证门板安装精度，内置衬套，防止摩擦产生尘粉，具有静音、承重、轻阻力
- 用　　途：一般适用于检测设备、环保、半导体、视觉检测、锂电、食品设备等自动化钣金框架
- 备　　注：不受门板厚度限制

Feature Description:

Material: SUS stainless steel body, SUS circlip, pin shaft, POM bushing
Surface treatment: ADC/SUS, sand, mirror, black, white
Structural function: hinge shaft design zero gap, to ensure the installation accuracy of the door panel, built-in bushing, to prevent friction from dust, with silent, load-bearing and light resistance
Uses: Generally suitable for testing equipment, environmental protection, semiconductors, visual inspection, lithium batteries, food equipment and other automated sheet metal frames
Remarks: Not limited by door panel thickness

地址：广东省肇庆市高要区金利镇都播工业区　电话：13929897256　邮箱：526202547@qq.com
Add: Dubo Industrial Zone, Jinli Town, Gaoyao District, Zhaoqing City, Guangdong Province　TEL: 13929897256　Email: 526202547@qq.com

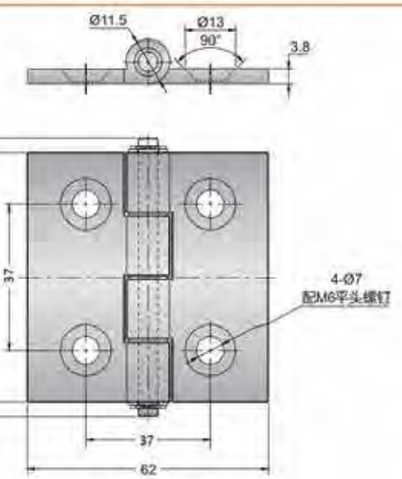

Feature Description:

Material: SUS stainless steel body, SUS circlip, pin shaft, POM bushing
Surface treatment: ADC/SUS, sand, mirror, black, white
Structural function: hinge shaft design zero gap, to ensure the installation accuracy of the door panel, built-in bushing, to prevent friction from dust, with silent, load-bearing and light resistance
Uses: Generally suitable for testing equipment, environmental protection, semiconductors, visual inspection, lithium batteries, food equipment and other automated sheet metal frames
Remarks: Not limited by door panel thickness

HL6163-3740

特征说明：

- 材　　质：SUS不锈钢主体，SUS卡簧，钢轴，POM衬套
- 表面处理：ADC/SUS，砂面、镜面，黑色、白色
- 结构功能：铰链轴心设计零缝隙，保证门板安装精度，内置衬套，防止摩擦产生尘粉，具有静音、承重、轻阻力
- 用　　途：一般适用于检测设备、环保、半导体、视觉检测、锂电、食品设备等自动化钣金框架
- 备　　注：不受门板厚度限制

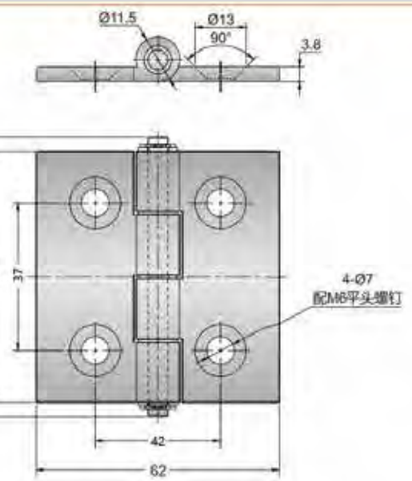

Feature Description:

Material: SUS stainless steel body, SUS circlip, pin shaft, POM bushing
Surface treatment: ADC/SUS, sand, mirror, black, white
Structural function: hinge shaft design zero gap, to ensure the installation accuracy of the door panel, built-in bushing, to prevent friction from dust, with silent, load-bearing and light resistance
Uses: Generally suitable for testing equipment, environmental protection, semiconductors, visual inspection, lithium batteries, food equipment and other automated sheet metal frames
Remarks: Not limited by door panel thickness

HL6163-3742

特征说明：

- 材　　质：SUS不锈钢主体，SUS卡簧，钢轴，POM衬套
- 表面处理：ADC/SUS，砂面、镜面，黑色、白色
- 结构功能：铰链轴心设计零缝隙，保证门板安装精度，内置衬套，防止摩擦产生尘粉，具有静音、承重、轻阻力
- 用　　途：一般适用于检测设备、环保、半导体、视觉检测、锂电、食品设备等自动化钣金框架
- 备　　注：不受门板厚度限制

地址：广东省肇庆市高要区金利镇都播工业区　电话：13929897256　邮箱：526202547@qq.com
Add: Dubo Industrial Zone, Jinli Town, Gaoyao District, Zhaoqing City, Guangdong Province　TEL: 13929897256　Email: 526202547@qq.com

HL6163-4040

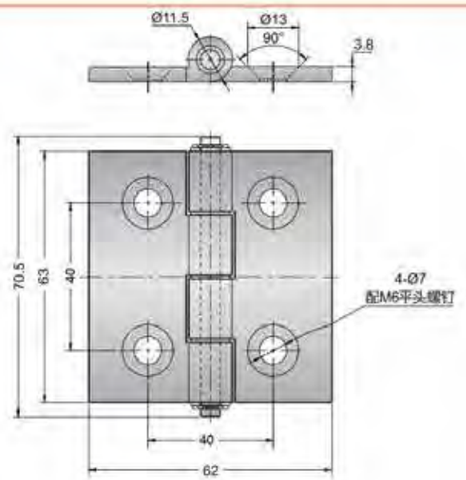

特征说明：

- 材　质：SUS不锈钢主体，SUS卡簧，销轴，POM衬套
- 表面处理：ADC/SUS，砂面，镜面，黑色，白色
- 结构功能：铰链轴心设计零缝隙，保证门板安装精度，内置衬套，防止摩擦产生尘粉，具有静音，承重，轻阻力
- 用　途：一般适用于检测设备，环保，半导体，视觉检测，锂电，食品设备等自动化钣金框架
- 备　注：不受门板厚度限制

Feature Description:

Material: SUS stainless steel body, SUS circlip, pin shaft, POM bushing
Surface treatment: ADC/SUS, sand, mirror, black, white
Structural function: hinge shaft design zero gap, to ensure the installation accuracy of the door panel, built-in bushing, to prevent friction from dust, with silent, load-bearing and light resistance
Uses: Generally suitable for testing equipment, environmental protection, semiconductors, visual inspection, lithium batteries, food equipment and other automated sheet metal frames
Remarks: Not limited by door panel thickness

HL6163-3737

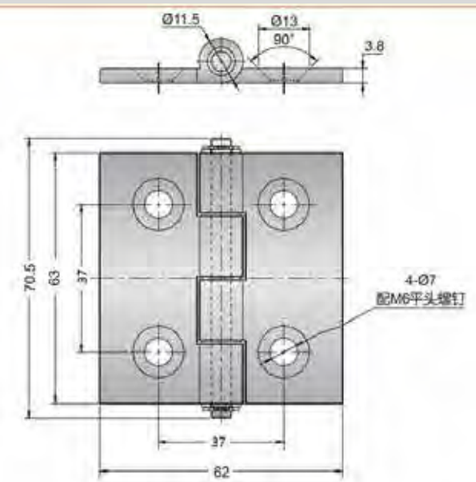

特征说明：

- 材　质：SUS不锈钢主体，SUS卡簧，销轴，POM衬套
- 表面处理：ADC/SUS，砂面，镜面，黑色，白色
- 结构功能：铰链轴心设计零缝隙，保证门板安装精度，内置衬套，防止摩擦产生尘粉，具有静音，承重，轻阻力
- 用　途：一般适用于检测设备，环保，半导体，视觉检测，锂电，食品设备等自动化钣金框架
- 备　注：不受门板厚度限制

Feature Description:

Material: SUS stainless steel body, SUS circlip, pin shaft, POM bushing
Surface treatment: ADC/SUS, sand, mirror, black, white
Structural function: hinge shaft design zero gap, to ensure the installation accuracy of the door panel, built-in bushing, to prevent friction from dust, with silent, load-bearing and light resistance
Uses: Generally suitable for testing equipment, environmental protection, semiconductors, visual inspection, lithium batteries, food equipment and other automated sheet metal frames
Remarks: Not limited by door panel thickness

地址：广东省肇庆市高要区金利镇都播工业区　电话：13929897256　邮箱：526202547@qq.com
Add: Dubo Industrial Zone, Jinli Town, Gaoyao District, Zhaoqing City, Guangdong Province　TEL: 13929897256　Email: 526202547@qq.com

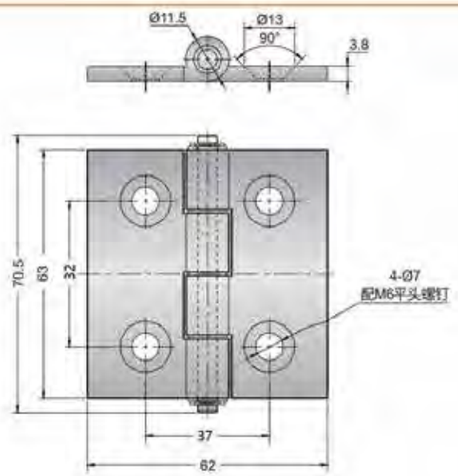

Feature Description:

Material: SUS stainless steel body, SUS circlip, pin shaft, POM bushing
Surface treatment: ADC/SUS, sand, mirror, black, white
Structural function: hinge shaft design zero gap, to ensure the installation accuracy of the door panel, built-in bushing, to prevent friction from dust, with silent, load-bearing and light resistance
Uses: Generally suitable for testing equipment, environmental protection, semiconductors, visual inspection, lithium batteries, food equipment and other automated sheet metal frames
Remarks: Not limited by door panel thickness

HL6163-3732

特征说明：

- 材　质：SUS不锈钢主体，SUS卡簧，销轴，POM衬套
- 表面处理：ADC/SUS，砂面，镜面，黑色，白色
- 结构功能：铰链轴心设计零缝隙，保证门板安装精度，内置衬套，防止摩擦产生尘粉，具有静音，承重，轻阻力
- 用　途：一般适用于检测设备，环保，半导体，视觉检测，锂电，食品设备等自动化钣金框架
- 备　注：不受门板厚度限制

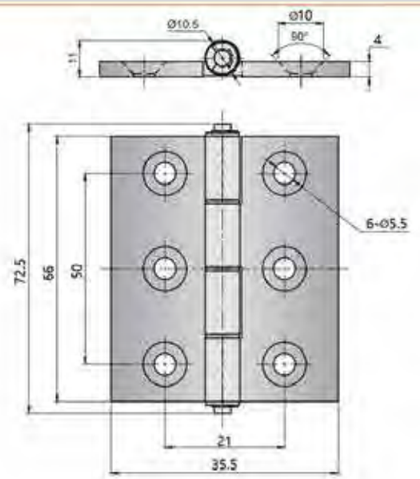

Feature Description:

Material: SUS stainless steel body, SUS circlip, pin shaft, POM bushing
Surface treatment: ADC/SUS, sand, mirror, black, white
Structural function: hinge shaft design zero gap, to ensure the installation accuracy of the door panel, built-in bushing, to prevent friction from dust, with silent, load-bearing and light resistance
Uses: Generally suitable for testing equipment, environmental protection, semiconductors, visual inspection, lithium batteries, food equipment and other automated sheet metal frames
Remarks: Not limited by door panel thickness

HL6635-5021

特征说明：

- 材　质：SUS不锈钢主体，SUS卡簧，销轴，POM衬套
- 表面处理：ADC/SUS，砂面，镜面，黑色，白色
- 结构功能：铰链轴心设计零缝隙，保证门板安装精度，内置衬套，防止摩擦产生尘粉，具有静音，承重，轻阻力
- 用　途：一般适用于检测设备，环保，半导体，视觉检测，锂电，食品设备等自动化钣金框架
- 备　注：不受门板厚度限制

地址：广东省肇庆市高要区金利镇都播工业区　电话：13929897256　邮箱：526202547@qq.com
Add: Dubo Industrial Zone, Jinli Town, Gaoyao District, Zhaoqing City, Guangdong Province　TEL: 13929897256　Email: 526202547@qq.com

把手锁 Handle lock
圆柱锁 Cylinder lock
平面锁 Plane lock
连杆锁 Rod control lock
面板锁 Panel lock
搭扣锁 Tonggle and hook
拉手 Handles
限位 Door stop
铰链 Hinge
冷库把手 Handle latch
磁吸 Magnet catch
附件 Accessories

HL7847-6032

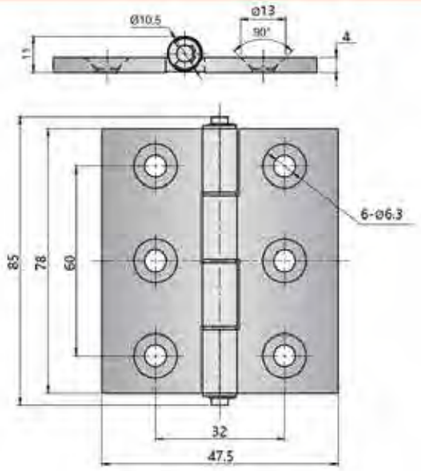

特征说明:

- 材　　质：SUS不锈钢主体，SUS卡簧、销轴，POM衬套
- 表面处理：ADC/SUS，砂面、镜面，黑色、白色
- 结构功能：铰链轴心设计零缝隙，保证门板安装精度，内置衬套，防止摩擦产生尘粉，具有静音、承重、轻阻力
- 用　　途：一般适用于检测设备、环保、半导体、视觉检测、锂电、食品设备等自动化钣金框架
- 备　　注：不受门板厚度限制

Feature Description:

Material: SUS stainless steel body, SUS circlip, pin shaft, POM bushing
Surface treatment: ADC/SUS, sand, mirror, black, white
Structural function: hinge shaft design zero gap, to ensure the installation accuracy of the door panel, built-in bushing, to prevent friction from dust, with silent, load-bearing and light resistance
Uses: Generally suitable for testing equipment, environmental protection, semiconductors, visual inspection, lithium batteries, food equipment and other automated sheet metal frames
Remarks: Not limited by door panel thickness

HL7847-5631

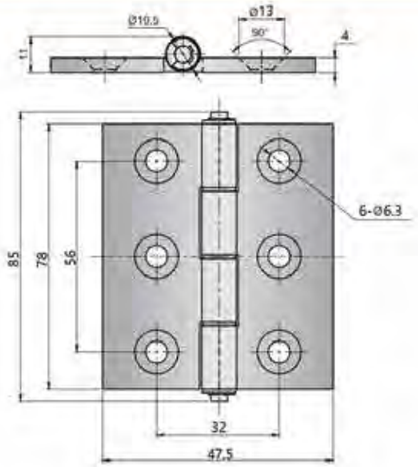

特征说明:

- 材　　质：SUS不锈钢主体，SUS卡簧、销轴，POM衬套
- 表面处理：ADC/SUS，砂面、镜面，黑色、白色
- 结构功能：铰链轴心设计零缝隙，保证门板安装精度，内置衬套，防止摩擦产生尘粉，具有静音、承重、轻阻力
- 用　　途：一般适用于检测设备、环保、半导体、视觉检测、锂电、食品设备等自动化钣金框架
- 备　　注：不受门板厚度限制

Feature Description:

Material: SUS stainless steel body, SUS circlip, pin shaft, POM bushing
Surface treatment: ADC/SUS, sand, mirror, black, white
Structural function: hinge shaft design zero gap, to ensure the installation accuracy of the door panel, built-in bushing, to prevent friction from dust, with silent, load-bearing and light resistance
Uses: Generally suitable for testing equipment, environmental protection, semiconductors, visual inspection, lithium batteries, food equipment and other automated sheet metal frames
Remarks: Not limited by door panel thickness

地址：广东省肇庆市高要区金利镇都播工业区　电话：13929897256　邮箱：526202547@qq.com
Add: Dubo Industrial Zone, Jinli Town, Gaoyao District, Zhaoqing City, Guangdong Province　TEL: 13929897256　Email: 526202547@qq.com

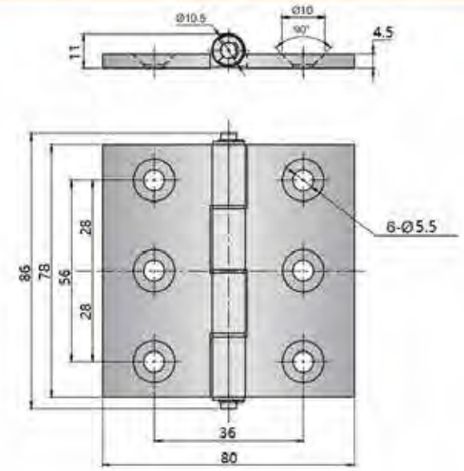

HL7879-5636

Feature Description:

Material: SUS stainless steel body, SUS circlip, pin shaft, POM bushing
Surface treatment: ADC/SUS, sand, mirror, black, white
Structural function: hinge shaft design zero gap, to ensure the installation accuracy of the door panel, built-in bushing, to prevent friction from dust, with silent, load-bearing and light resistance
Uses: Generally suitable for testing equipment, environmental protection, semiconductors, visual inspection, lithium batteries, food equipment and other automated sheet metal frames
Remarks: Not limited by door panel thickness

特征说明:

- 材　　质：SUS不锈钢主体，SUS卡簧、销轴，POM衬套
- 表面处理：ADC/SUS，砂面、镜面，黑色、白色
- 结构功能：铰链轴心设计零缝隙，保证门板安装精度，内置衬套，防止摩擦产生尘粉，具有静音、承重、轻阻力
- 用　　途：一般适用于检测设备、环保、半导体、视觉检测、锂电、食品设备等自动化钣金框架
- 备　　注：不受门板厚度限制

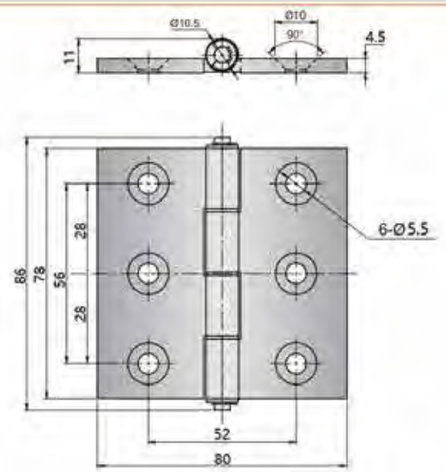

HL7879-5652

Feature Description:

Material: SUS stainless steel body, SUS circlip, pin shaft, POM bushing
Surface treatment: ADC/SUS, sand, mirror, black, white
Structural function: hinge shaft design zero gap, to ensure the installation accuracy of the door panel, built-in bushing, to prevent friction from dust, with silent, load-bearing and light resistance
Uses: Generally suitable for testing equipment, environmental protection, semiconductors, visual inspection, lithium batteries, food equipment and other automated sheet metal frames
Remarks: Not limited by door panel thickness

特征说明:

- 材　　质：SUS不锈钢主体，SUS卡簧、销轴，POM衬套
- 表面处理：ADC/SUS，砂面、镜面，黑色、白色
- 结构功能：铰链轴心设计零缝隙，保证门板安装精度，内置衬套，防止摩擦产生尘粉，具有静音、承重、轻阻力
- 用　　途：一般适用于检测设备、环保、半导体、视觉检测、锂电、食品设备等自动化钣金框架
- 备　　注：不受门板厚度限制

把手锁 Handle lock
圆柱锁 Cylinder lock
平面锁 Plane lock
连杆锁 lock Rod control
面板锁 Panel lock
搭扣锁 hook Tonggle and
拉手 Handles
限位 Door stop
铰链 Hinge
冷库把手 Handle latch
磁吸 Magnet catch
附件 Accessories

地址：广东省肇庆市高要区金利镇都播工业区　电话：13929897256　邮箱：526202547@qq.com
Add: Dubo Industrial Zone, Jinli Town, Gaoyao District, Zhaoqing City, Guangdong Province　TEL: 13929897256　Email: 526202547@qq.com

HL6356-4038

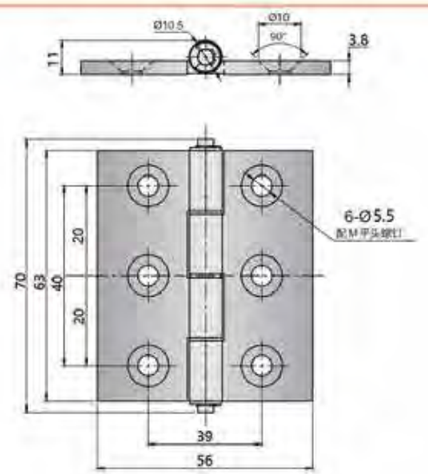

特征说明:

- 材　　质：SUS不锈钢主体，SUS卡簧，销轴，POM衬套
- 表面处理：ADC/SUS，砂面，镜面，黑色，白色
- 结构功能：铰链轴心设计零缝隙，保证门板安装精度，内置衬套，防止摩擦产生尘粉，具有静音，承重，轻阻力
- 用　　途：一般适用于检测设备，环保，半导体，视觉检测，锂电，食品设备等自动化板金框架
- 备　　注：不受门板厚度限制

Feature Description:

Material: SUS stainless steel body, SUS circlip, pin shaft, POM bushing
Surface treatment: ADC/SUS, sand, mirror, black, white
Structural function: hinge shaft design zero gap, to ensure the installation accuracy of the door panel, built-in bushing, to prevent friction from dust, with silent, load-bearing and light resistance
Uses: Generally suitable for testing equipment, environmental protection, semiconductors, visual inspection, lithium batteries, food equipment and other automated sheet metal frames
Remarks: Not limited by door panel thickness

HL7861-5642

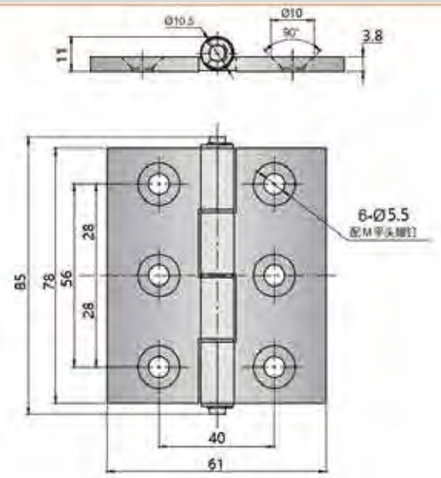

特征说明:

- 材　　质：SUS不锈钢主体，SUS卡簧，销轴，POM衬套
- 表面处理：ADC/SUS，砂面，镜面，黑色，白色
- 结构功能：铰链轴心设计零缝隙，保证门板安装精度，内置衬套，防止摩擦产生尘粉，具有静音，承重，轻阻力
- 用　　途：一般适用于检测设备，环保，半导体，视觉检测，锂电，食品设备等自动化板金框架
- 备　　注：不受门板厚度限制

Feature Description:

Material: SUS stainless steel body, SUS circlip, pin shaft, POM bushing
Surface treatment: ADC/SUS, sand, mirror, black, white
Structural function: hinge shaft design zero gap, to ensure the installation accuracy of the door panel, built-in bushing, to prevent friction from dust, with silent, load-bearing and light resistance
Uses: Generally suitable for testing equipment, environmental protection, semiconductors, visual inspection, lithium batteries, food equipment and other automated sheet metal frames
Remarks: Not limited by door panel thickness

地址：广东省肇庆市高要区金利镇都播工业区　电话：13929897256　邮箱：526202547@qq.com
Add: Dubo Industrial Zone, Jinli Town, Gaoyao District, Zhaoqing City, Guangdong Province　TEL: 13929897256　Email: 526202547@qq.com

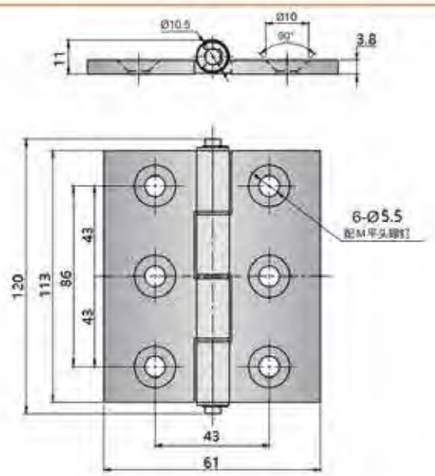

Feature Description:

Material: SUS stainless steel body, SUS circlip, pin shaft, POM bushing
Surface treatment: ADC/SUS, sand, mirror, black, white
Structural function: hinge shaft design zero gap, to ensure the installation accuracy of the door panel, built-in bushing, to prevent friction from dust, with silent, load-bearing and light resistance
Uses: Generally suitable for testing equipment, environmental protection, semiconductors, visual inspection, lithium batteries, food equipment and other automated sheet metal frames
Remarks: Not limited by door panel thickness

HL11362-8642

特征说明:

- 材　　质：SUS不锈钢主体，SUS卡簧，销轴，POM衬套
- 表面处理：ADC/SUS，砂面，镜面，黑色，白色
- 结构功能：铰链轴心设计零缝隙，保证门板安装精度，内置衬套，防止摩擦产生尘粉，具有静音，承重，轻阻力
- 用　　途：一般适用于检测设备，环保，半导体，视觉检测，锂电，食品设备等自动化板金框架
- 备　　注：不受门板厚度限制

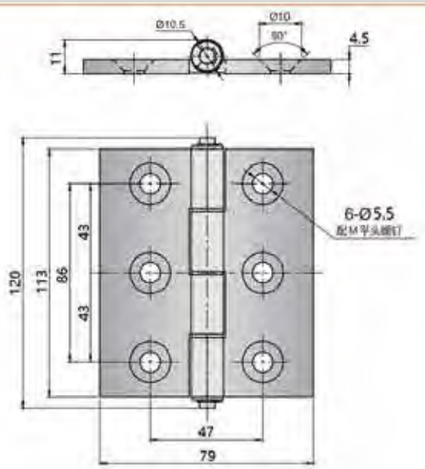

Feature Description:

Material: SUS stainless steel body, SUS circlip, pin shaft, POM bushing
Surface treatment: ADC/SUS, sand, mirror, black, white
Structural function: hinge shaft design zero gap, to ensure the installation accuracy of the door panel, built-in bushing, to prevent friction from dust, with silent, load-bearing and light resistance
Uses: Generally suitable for testing equipment, environmental protection, semiconductors, visual inspection, lithium batteries, food equipment and other automated sheet metal frames
Remarks: Not limited by door panel thickness

HL11379-8647

特征说明:

- 材　　质：SUS不锈钢主体，SUS卡簧，销轴，POM衬套
- 表面处理：ADC/SUS，砂面，镜面，黑色，白色
- 结构功能：铰链轴心设计零缝隙，保证门板安装精度，内置衬套，防止摩擦产生尘粉，具有静音，承重，轻阻力
- 用　　途：一般适用于检测设备，环保，半导体，视觉检测，锂电，食品设备等自动化板金框架
- 备　　注：不受门板厚度限制

地址：广东省肇庆市高要区金利镇都播工业区　电话：13929897256　邮箱：526202547@qq.com
Add: Dubo Industrial Zone, Jinli Town, Gaoyao District, Zhaoqing City, Guangdong Province　TEL: 13929897256　Email: 526202547@qq.com

把手锁 Handle lock
圆柱锁 Cylinder lock
平面锁 Plane lock
连杆锁 Rod control lock
面板锁 Panel lock
搭扣锁 Tonggle and hook
拉手 Handles
限位 Door stop
铰链 Hinge
冷库把手 Handle latch
磁吸 Magnet catch
附件 Accessories

HL6379-4346

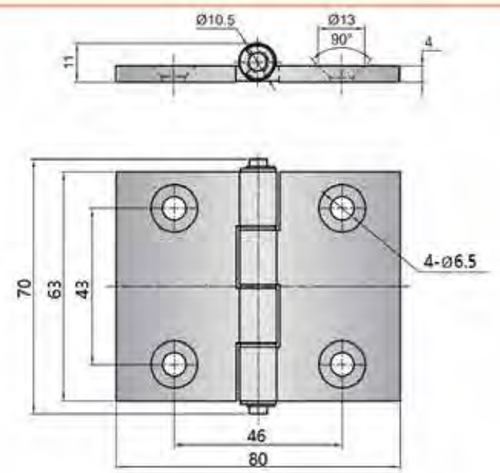

特征说明：

- 材　　质：SUS不锈钢主体，SUS卡簧，钢轴，POM衬套
- 表面处理：ADC/SUS，砂面、镜面，黑色、白色
- 结构功能：铰链轴心设计零缝隙，保证门板安装精度，内置衬套，防止摩擦产生尘粉，具有静音、承重、轻阻力
- 用　　途：一般适用于检测设备、环保、半导体、视觉检测、锂电、食品设备等自动化钣金框架
- 备　　注：不受门板厚度限制

Feature Description:

Material: SUS stainless steel body, SUS circlip, pin shaft, POM bushing
Surface treatment: ADC/SUS, sand, mirror, black, white
Structural function: hinge shaft design zero gap, to ensure the installation accuracy of the door panel, built-in bushing, to prevent friction from dust, with silent, load-bearing and light resistance
Uses: Generally suitable for testing equipment, environmental protection, semiconductors, visual inspection, lithium batteries, food equipment and other automated sheet metal frames
Remarks: Not limited by door panel thickness

HL6379-4347

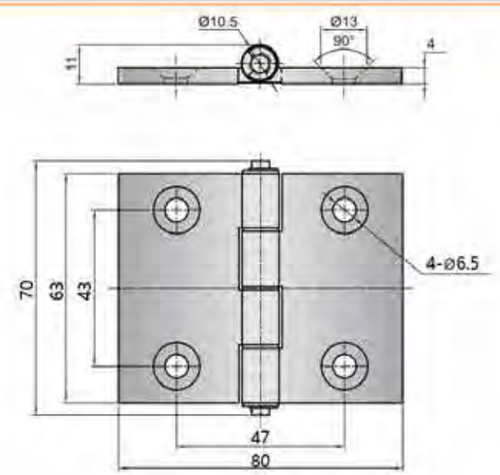

特征说明：

- 材　　质：SUS不锈钢主体，SUS卡簧，钢轴，POM衬套
- 表面处理：ADC/SUS，砂面、镜面，黑色、白色
- 结构功能：铰链轴心设计零缝隙，保证门板安装精度，内置衬套，防止摩擦产生尘粉，具有静音、承重、轻阻力
- 用　　途：一般适用于检测设备、环保、半导体、视觉检测、锂电、食品设备等自动化钣金框架
- 备　　注：不受门板厚度限制

Feature Description:

Material: SUS stainless steel body, SUS circlip, pin shaft, POM bushing
Surface treatment: ADC/SUS, sand, mirror, black, white
Structural function: hinge shaft design zero gap, to ensure the installation accuracy of the door panel, built-in bushing, to prevent friction from dust, with silent, load-bearing and light resistance
Uses: Generally suitable for testing equipment, environmental protection, semiconductors, visual inspection, lithium batteries, food equipment and other automated sheet metal frames
Remarks: Not limited by door panel thickness

地址：广东省肇庆市高要区金利镇都播工业区　电话：13929897256　邮箱：526202547@qq.com
Add: Dubo Industrial Zone, Jinli Town, Gaoyao District, Zhaoqing City, Guangdong Province　TEL: 13929897256　Email: 526202547@qq.com

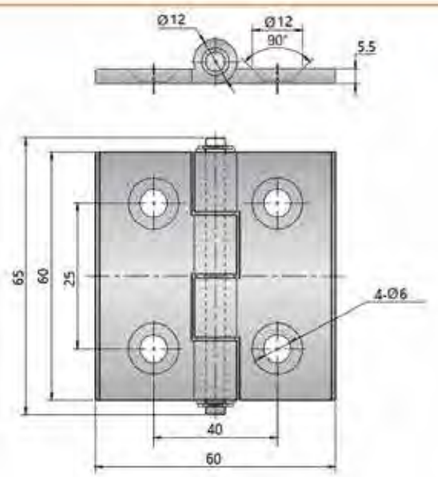

HL6060-2540

Feature Description:

Material: SUS stainless steel body, SUS circlip, pin shaft, POM bushing
Surface treatment: ADC/SUS, sand, mirror, black, white
Structural function: hinge shaft design zero gap, to ensure the installation accuracy of the door panel, built-in bushing, to prevent friction from dust, with silent, load-bearing and light resistance
Uses: Generally suitable for testing equipment, environmental protection, semiconductors, visual inspection, lithium batteries, food equipment and other automated sheet metal frames
Remarks: Not limited by door panel thickness

特征说明：

- 材　　质：SUS不锈钢主体，SUS卡簧，钢轴，POM衬套
- 表面处理：ADC/SUS，砂面、镜面，黑色、白色
- 结构功能：铰链轴心设计零缝隙，保证门板安装精度，内置衬套，防止摩擦产生尘粉，具有静音、承重、轻阻力
- 用　　途：一般适用于检测设备、环保、半导体、视觉检测、锂电、食品设备等自动化钣金框架
- 备　　注：不受门板厚度限制

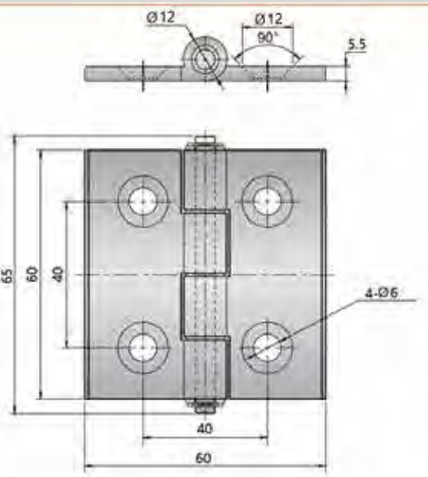

HL6060-4040

Feature Description:

Material: SUS stainless steel body, SUS circlip, pin shaft, POM bushing
Surface treatment: ADC/SUS, sand, mirror, black, white
Structural function: hinge shaft design zero gap, to ensure the installation accuracy of the door panel, built-in bushing, to prevent friction from dust, with silent, load-bearing and light resistance
Uses: Generally suitable for testing equipment, environmental protection, semiconductors, visual inspection, lithium batteries, food equipment and other automated sheet metal frames
Remarks: Not limited by door panel thickness

特征说明：

- 材　　质：SUS不锈钢主体，SUS卡簧，钢轴，POM衬套
- 表面处理：ADC/SUS，砂面、镜面，黑色、白色
- 结构功能：铰链轴心设计零缝隙，保证门板安装精度，内置衬套，防止摩擦产生尘粉，具有静音、承重、轻阻力
- 用　　途：一般适用于检测设备、环保、半导体、视觉检测、锂电、食品设备等自动化钣金框架
- 备　　注：不受门板厚度限制

地址：广东省肇庆市高要区金利镇都播工业区　电话：13929897256　邮箱：526202547@qq.com
Add: Dubo Industrial Zone, Jinli Town, Gaoyao District, Zhaoqing City, Guangdong Province　TEL: 13929897256　Email: 526202547@qq.com

把手锁 Handle lock
圆柱锁 Cylinder lock
平面锁 Plane lock
连杆锁 Rod control lock
面板锁 Panel lock
搭扣锁 Tonggle and hook
拉手 Handles
限位 Door stop
铰链 Hinge
冷库把手 Handle latch
磁吸 Magnet catch
附件 Accessories

HL6060-4041

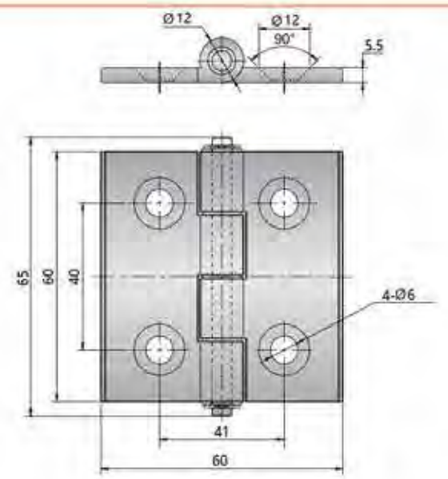

特征说明:

- 材　　质：SUS不锈钢主体，SUS卡簧，铜轴，POM衬套
- 表面处理：ADC/SUS，砂面，镜面，黑色，白色
- 结构功能：铰链轴心设计零缝隙，保证门板安装精度，内置衬套，防止摩擦产生尘粉，具有静音，承重，轻阻力
- 用　　途：一般适用于检测设备，环保，半导体，视觉检测，锂电，食品设备等自动化板金框架
- 备　　注：不受门板厚度限制

Feature Description:

Material: SUS stainless steel body, SUS circlip, pin shaft, POM bushing
Surface treatment: ADC/SUS, sand, mirror, black, white
Structural function: hinge shaft design zero gap, to ensure the installation accuracy of the door panel, built-in bushing, to prevent friction from dust, with silent, load-bearing and light resistance
Uses: Generally suitable for testing equipment, environmental protection, semiconductors, visual inspection, lithium batteries, food equipment and other automated sheet metal frames
Remarks: Not limited by door panel thickness

HL6060-4036

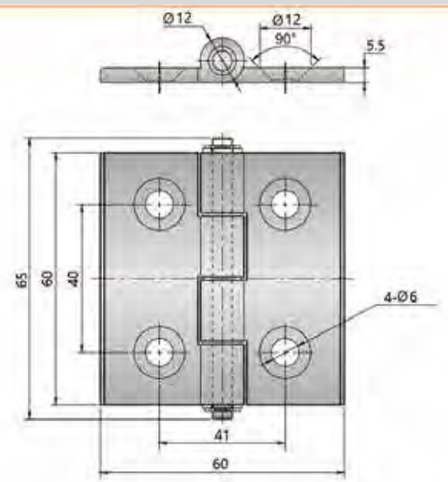

特征说明:

- 材　　质：SUS不锈钢主体，SUS卡簧，铜轴，POM衬套
- 表面处理：ADC/SUS，砂面，镜面，黑色，白色
- 结构功能：铰链轴心设计零缝隙，保证门板安装精度，内置衬套，防止摩擦产生尘粉，具有静音，承重，轻阻力
- 用　　途：一般适用于检测设备，环保，半导体，视觉检测，锂电，食品设备等自动化板金框架
- 备　　注：不受门板厚度限制

Feature Description:

Material: SUS stainless steel body, SUS circlip, pin shaft, POM bushing
Surface treatment: ADC/SUS, sand, mirror, black, white
Structural function: hinge shaft design zero gap, to ensure the installation accuracy of the door panel, built-in bushing, to prevent friction from dust, with silent, load-bearing and light resistance
Uses: Generally suitable for testing equipment, environmental protection, semiconductors, visual inspection, lithium batteries, food equipment and other automated sheet metal frames
Remarks: Not limited by door panel thickness

地址：广东省肇庆市高要区金利镇都播工业区　电话：13929897256　邮箱：526202547@qq.com
Add: Dubo Industrial Zone, Jinli Town, Gaoyao District, Zhaoqing City, Guangdong Province　TEL: 13929897256　Email: 526202547@qq.com

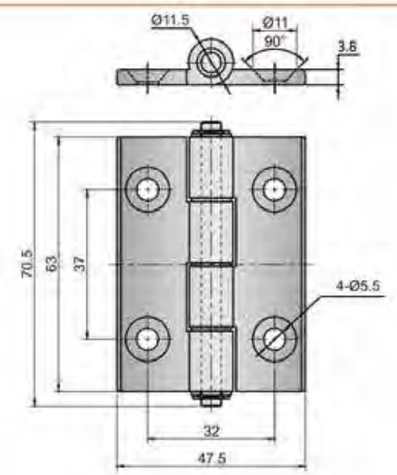

HL6354-3734

Feature Description:

Material: SUS stainless steel body, SUS circlip, pin shaft, POM bushing
Surface treatment: ADC/SUS, sand, mirror, black, white
Structural function: hinge shaft design zero gap, to ensure the installation accuracy of the door panel, built-in bushing, to prevent friction from dust, with silent, load-bearing and light resistance
Uses: Generally suitable for testing equipment, environmental protection, semiconductors, visual inspection, lithium batteries, food equipment and other automated sheet metal frames
Remarks: Not limited by door panel thickness

特征说明:

- 材　　质：SUS不锈钢主体，SUS卡簧，铜轴，POM衬套
- 表面处理：ADC/SUS，砂面，镜面，黑色，白色
- 结构功能：铰链轴心设计零缝隙，保证门板安装精度，内置衬套，防止摩擦产生尘粉，具有静音，承重，轻阻力
- 用　　途：一般适用于检测设备，环保，半导体，视觉检测，锂电，食品设备等自动化板金框架
- 备　　注：不受门板厚度限制

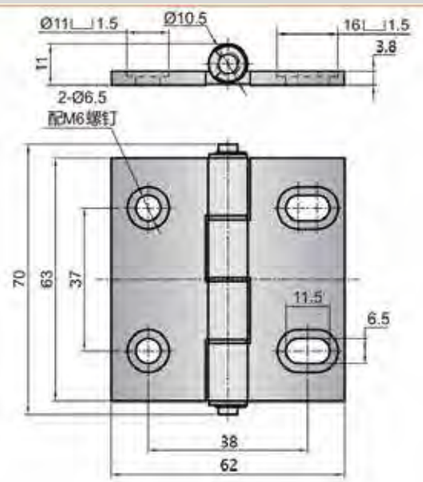

HL6163-3638KT

Feature Description:

Material: SUS stainless steel body, SUS circlip, pin shaft, POM bushing
Surface treatment: ADC/SUS, sand, mirror, black, white
Structural function: hinge shaft design zero gap, to ensure the installation accuracy of the door panel, built-in bushing, to prevent friction from dust, with silent, load-bearing and light resistance
Uses: Generally suitable for testing equipment, environmental protection, semiconductors, visual inspection, lithium batteries, food equipment and other automated sheet metal frames
Remarks: Not limited by door panel thickness

特征说明:

- 材　　质：SUS不锈钢主体，SUS卡簧，铜轴，POM衬套
- 表面处理：ADC/SUS，砂面，镜面，黑色，白色
- 结构功能：铰链轴心设计零缝隙，保证门板安装精度，内置衬套，防止摩擦产生尘粉，具有静音，承重，轻阻力
- 用　　途：一般适用于检测设备，环保，半导体，视觉检测，锂电，食品设备等自动化板金框架
- 备　　注：不受门板厚度限制

地址：广东省肇庆市高要区金利镇都播工业区　电话：13929897256　邮箱：526202547@qq.com
Add: Dubo Industrial Zone, Jinli Town, Gaoyao District, Zhaoqing City, Guangdong Province　TEL: 13929897256　Email: 526202547@qq.com

HL4747-3033ST

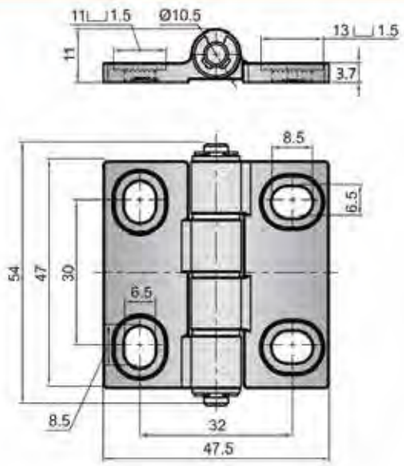

特征说明:

- 材　质：SUS不锈钢主体，SUS卡簧，钢轴，POM衬套
- 表面处理：ADC/SUS，砂面，镜面，黑色，白色
- 结构功能：铰链轴心设计零缝隙，保证门板安装精度，内置衬套，防止摩擦产生尘粉，具有静音，承重，轻阻力
- 用　途：一般适用于检测设备，环保，半导体，视觉检测，锂电，食品设备等自动化钣金框架
- 备　注：不受门板厚度限制

Feature Description:

Material: SUS stainless steel body, SUS circlip, pin shaft, POM bushing
Surface treatment: ADC/SUS, sand, mirror, black, white
Structural function: hinge shaft design zero gap, to ensure the installation accuracy of the door panel, built-in bushing, to prevent friction from dust, with silent, load-bearing and light resistance
Uses: Generally suitable for testing equipment, environmental protection, semiconductors, visual inspection, lithium batteries, food equipment and other automated sheet metal frames
Remarks: Not limited by door panel thickness

HL4761-2837KT

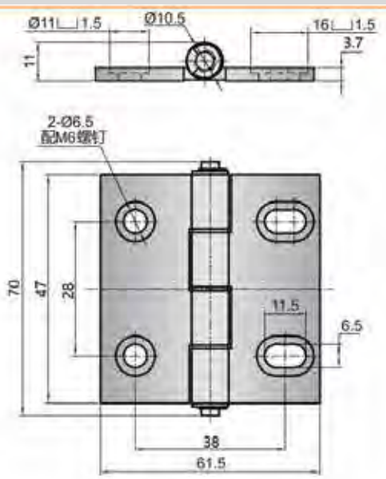

特征说明:

- 材　质：SUS不锈钢主体，SUS卡簧，钢轴，POM衬套
- 表面处理：ADC/SUS，砂面，镜面，黑色，白色
- 结构功能：铰链轴心设计零缝隙，保证门板安装精度，内置衬套，防止摩擦产生尘粉，具有静音，承重，轻阻力
- 用　途：一般适用于检测设备，环保，半导体，视觉检测，锂电，食品设备等自动化钣金框架
- 备　注：不受门板厚度限制

Feature Description:

Material: SUS stainless steel body, SUS circlip, pin shaft, POM bushing
Surface treatment: ADC/SUS, sand, mirror, black, white
Structural function: hinge shaft design zero gap, to ensure the installation accuracy of the door panel, built-in bushing, to prevent friction from dust, with silent, load-bearing and light resistance
Uses: Generally suitable for testing equipment, environmental protection, semiconductors, visual inspection, lithium batteries, food equipment and other automated sheet metal frames
Remarks: Not limited by door panel thickness

地址：广东省肇庆市高要区金利镇都播工业区　电话：13929897256　邮箱：526202547@qq.com
Add: Dubo Industrial Zone, Jinli Town, Gaoyao District, Zhaoqing City, Guangdong Province　TEL: 13929897256　Email: 526202547@qq.com

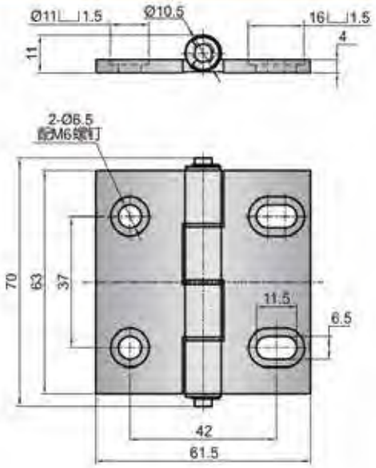

HL6163-3745KT

Feature Description:

Material: SUS stainless steel body, SUS circlip, pin shaft, POM bushing
Surface treatment: ADC/SUS, sand, mirror, black, white
Structural function: hinge shaft design zero gap, to ensure the installation accuracy of the door panel, built-in bushing, to prevent friction from dust, with silent, load-bearing and light resistance
Uses: Generally suitable for testing equipment, environmental protection, semiconductors, visual inspection, lithium batteries, food equipment and other automated sheet metal frames
Remarks: Not limited by door panel thickness

特征说明:

- 材　质：SUS不锈钢主体，SUS卡簧，钢轴，POM衬套
- 表面处理：ADC/SUS，砂面，镜面，黑色，白色
- 结构功能：铰链轴心设计零缝隙，保证门板安装精度，内置衬套，防止摩擦产生尘粉，具有静音，承重，轻阻力
- 用　途：一般适用于检测设备，环保，半导体，视觉检测，锂电，食品设备等自动化钣金框架
- 备　注：不受门板厚度限制

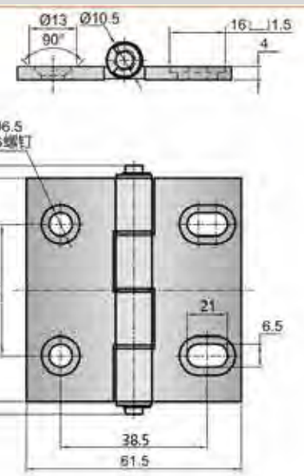

HL6163-1BT

Feature Description:

Material: SUS stainless steel body, SUS circlip, pin shaft, POM bushing
Surface treatment: ADC/SUS, sand, mirror, black, white
Structural function: hinge shaft design zero gap, to ensure the installation accuracy of the door panel, built-in bushing, to prevent friction from dust, with silent, load-bearing and light resistance
Uses: Generally suitable for testing equipment, environmental protection, semiconductors, visual inspection, lithium batteries, food equipment and other automated sheet metal frames
Remarks: Not limited by door panel thickness

特征说明:

- 材　质：SUS不锈钢主体，SUS卡簧，钢轴，POM衬套
- 表面处理：ADC/SUS，砂面，镜面，黑色，白色
- 结构功能：铰链轴心设计零缝隙，保证门板安装精度，内置衬套，防止摩擦产生尘粉，具有静音，承重，轻阻力
- 用　途：一般适用于检测设备，环保，半导体，视觉检测，锂电，食品设备等自动化钣金框架
- 备　注：不受门板厚度限制

把手锁 Handle lock
圆柱锁 Cylinder lock
平面锁 Plane lock
连杆锁 lock Rod control
面板锁 Panel lock
搭扣锁 hook Tonggle and
拉手 Handies
限位 Door stop
铰链 Hinge
冷库把手 Handle latch
磁吸 Magnet catch
附件 Accessories

地址：广东省肇庆市高要区金利镇都播工业区　电话：13929897256　邮箱：526202547@qq.com
Add: Dubo Industrial Zone, Jinli Town, Gaoyao District, Zhaoqing City, Guangdong Province　TEL: 13929897256　Email: 526202547@qq.com

把手锁 Handle lock
圆柱锁 Cylinder lock
平面锁 Plane lock
连杆锁 Rod control lock
面板锁 Panel lock
搭扣锁 Tonggle and hook
拉手 Handles
限位 Door stop
铰链 Hinge
冷库把手 Handle latch
磁吸 Magnet catch
附件 Accessories

HL7863-5645BT

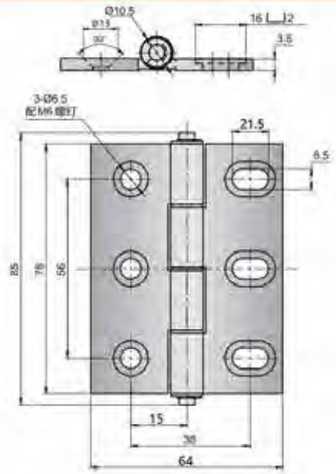

特征说明:

- 材　　质：SUS不锈钢主体，SUS卡簧，钢轴，POM衬套
- 表面处理：ADC/SUS，砂面、镜面，黑色、白色
- 结构功能：铰链轴心设计零缝隙，保证门板安装精度，内置衬套，防止摩擦产生尘粉，具有静音，承重，轻阻力
- 用　　途：一般适用于检测设备，环保，半导体，视觉检测，锂电，食品设备等自动化板金框架
- 备　　注：不受门板厚度限制

Feature Description:

Material: SUS stainless steel body, SUS circlip, pin shaft, POM bushing
Surface treatment: ADC/SUS, sand, mirror, black, white
Structural function: hinge shaft design zero gap, to ensure the installation accuracy of the door panel, built-in bushing, to prevent friction from dust, with silent, load-bearing and light resistance
Uses: Generally suitable for testing equipment, environmental protection, semiconductors, visual inspection, lithium batteries, food equipment and other automated sheet metal frames
Remarks: Not limited by door panel thickness

HL6363-1BT

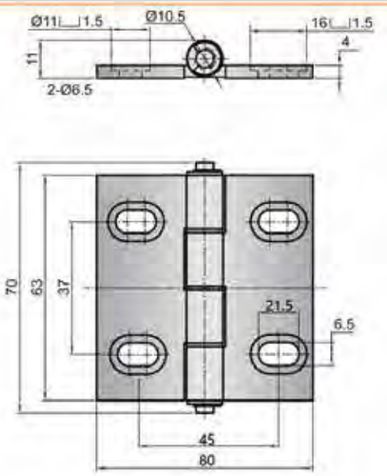

特征说明:

- 材　　质：SUS不锈钢主体，SUS卡簧，钢轴，POM衬套
- 表面处理：ADC/SUS，砂面、镜面，黑色、白色
- 结构功能：铰链轴心设计零缝隙，保证门板安装精度，内置衬套，防止摩擦产生尘粉，具有静音，承重，轻阻力
- 用　　途：一般适用于检测设备，环保，半导体，视觉检测，锂电，食品设备等自动化板金框架
- 备　　注：不受门板厚度限制

Feature Description:

Material: SUS stainless steel body, SUS circlip, pin shaft, POM bushing
Surface treatment: ADC/SUS, sand, mirror, black, white
Structural function: hinge shaft design zero gap, to ensure the installation accuracy of the door panel, built-in bushing, to prevent friction from dust, with silent, load-bearing and light resistance
Uses: Generally suitable for testing equipment, environmental protection, semiconductors, visual inspection, lithium batteries, food equipment and other automated sheet metal frames
Remarks: Not limited by door panel thickness

地址：广东省肇庆市高要区金利镇都播工业区　电话：13929897256　邮箱：526202547@qq.com
Add: Dubo Industrial Zone, Jinli Town, Gaoyao District, Zhaoqing City, Guangdong Province　TEL: 13929897256　Email: 526202547@qq.com

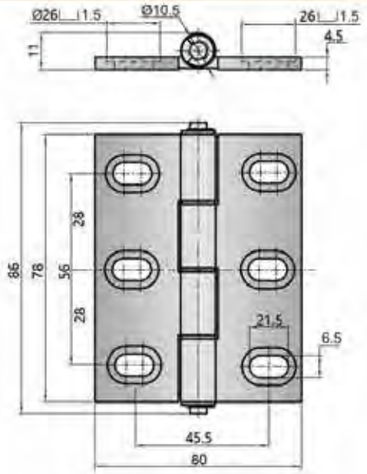

HL7879-5645ST

特征说明:

- 材　　质：SUS不锈钢主体，SUS卡簧，钢轴，POM衬套
- 表面处理：ADC/SUS，砂面、镜面，黑色、白色
- 结构功能：铰链轴心设计零缝隙，保证门板安装精度，内置衬套，防止摩擦产生尘粉，具有静音，承重，轻阻力
- 用　　途：一般适用于检测设备，环保，半导体，视觉检测，锂电，食品设备等自动化板金框架
- 备　　注：不受门板厚度限制

Feature Description:

Material: SUS stainless steel body, SUS circlip, pin shaft, POM bushing
Surface treatment: ADC/SUS, sand, mirror, black, white
Structural function: hinge shaft design zero gap, to ensure the installation accuracy of the door panel, built-in bushing, to prevent friction from dust, with silent, load-bearing and light resistance
Uses: Generally suitable for testing equipment, environmental protection, semiconductors, visual inspection, lithium batteries, food equipment and other automated sheet metal frames
Remarks: Not limited by door panel thickness

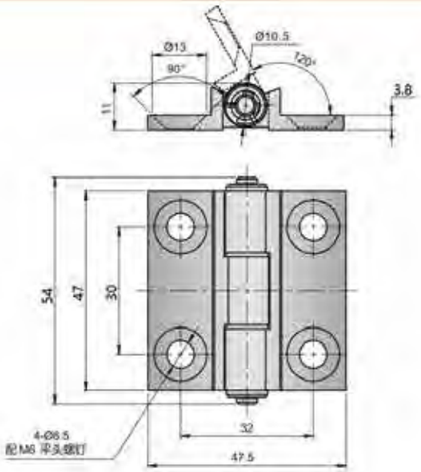

HL4747-3031X

特征说明:

- 材　　质：SUS不锈钢主体，SUS卡簧，钢轴，POM衬套
- 表面处理：ADC/SUS，砂面、镜面，黑色、白色
- 结构功能：铰链轴心设计零缝隙，保证门板安装精度，内置衬套，防止摩擦产生尘粉，具有静音，承重，轻阻力
- 用　　途：一般适用于检测设备，环保，半导体，视觉检测，锂电，食品设备等自动化板金框架
- 备　　注：不受门板厚度限制

Feature Description:

Material: SUS stainless steel body, SUS circlip, pin shaft, POM bushing
Surface treatment: ADC/SUS, sand, mirror, black, white
Structural function: hinge shaft design zero gap, to ensure the installation accuracy of the door panel, built-in bushing, to prevent friction from dust, with silent, load-bearing and light resistance
Uses: Generally suitable for testing equipment, environmental protection, semiconductors, visual inspection, lithium batteries, food equipment and other automated sheet metal frames
Remarks: Not limited by door panel thickness

地址：广东省肇庆市高要区金利镇都播工业区　电话：13929897256　邮箱：526202547@qq.com
Add: Dubo Industrial Zone, Jinli Town, Gaoyao District, Zhaoqing City, Guangdong Province　TEL: 13929897256　Email: 526202547@qq.com

把手锁 Handle lock
圆柱锁 Cylinder lock
平面锁 Plane lock
连杆锁 Rod control lock
面板锁 Panel lock
搭扣锁 Tonggle and hook
拉手 Handles
限位 Door stop
铰链 Hinge
冷库把手 Handle latch
磁吸 Magnet catch
附件 Accessories

HL6163-3735X

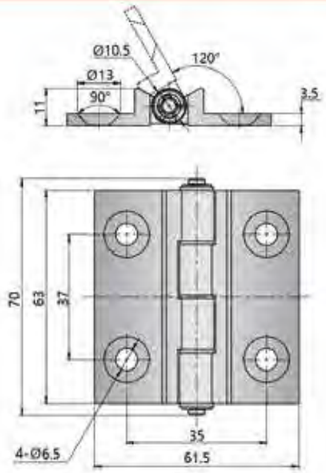

特征说明：

- 材　　质：SUS不锈钢主体，SUS卡簧，销轴，POM衬套
- 表面处理：ADC/SUS，砂面、镜面、黑色、白色
- 结构功能：铰链轴心设计零缝隙，保证门板安装精度，内置衬套，防止摩擦产生尘粉，具有静音，承重，轻阻力
- 用　　途：一般适用于检测设备、环保、半导体、视觉检测、锂电、食品设备等自动化钣金框架
- 备　　注：不受门板厚度限制

Feature Description:

Material: SUS stainless steel body, SUS circlip, pin shaft, POM bushing
Surface treatment: ADC/SUS, sand, mirror, black, white
Structural function: hinge shaft design zero gap, to ensure the installation accuracy of the door panel, built-in bushing, to prevent friction from dust, with silent, load-bearing and light resistance
Uses: Generally suitable for testing equipment, environmental protection, semiconductors, visual inspection, lithium batteries, food equipment and other automated sheet metal frames
Remarks: Not limited by door panel thickness

HL6163-3737X

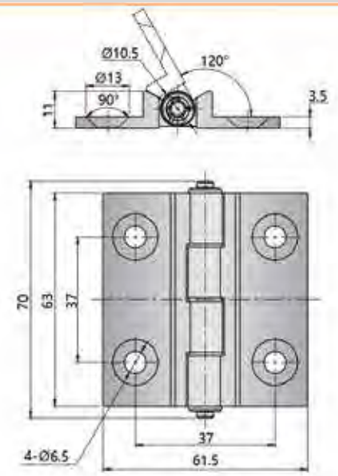

特征说明：

- 材　　质：SUS不锈钢主体，SUS卡簧，销轴，POM衬套
- 表面处理：ADC/SUS，砂面、镜面、黑色、白色
- 结构功能：铰链轴心设计零缝隙，保证门板安装精度，内置衬套，防止摩擦产生尘粉，具有静音，承重，轻阻力
- 用　　途：一般适用于检测设备、环保、半导体、视觉检测、锂电、食品设备等自动化钣金框架
- 备　　注：不受门板厚度限制

Feature Description:

Material: SUS stainless steel body, SUS circlip, pin shaft, POM bushing
Surface treatment: ADC/SUS, sand, mirror, black, white
Structural function: hinge shaft design zero gap, to ensure the installation accuracy of the door panel, built-in bushing, to prevent friction from dust, with silent, load-bearing and light resistance
Uses: Generally suitable for testing equipment, environmental protection, semiconductors, visual inspection, lithium batteries, food equipment and other automated sheet metal frames
Remarks: Not limited by door panel thickness

地址：广东省肇庆市高要区金利镇都播工业区　电话：13929897256　邮箱：526202547@qq.com
Add: Dubo Industrial Zone, Jinli Town, Gaoyao District, Zhaoqing City, Guangdong Province　TEL: 13929897256　Email: 526202547@qq.com

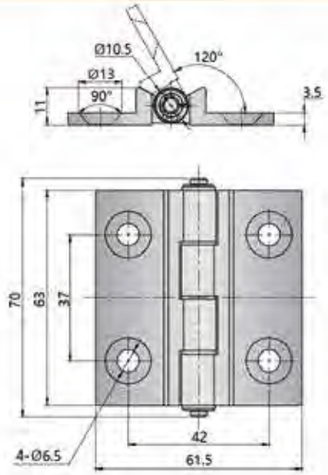

HL6163-3742X

Feature Description:

Material: SUS stainless steel body, SUS circlip, pin shaft, POM bushing
Surface treatment: ADC/SUS, sand, mirror, black, white
Structural function: hinge shaft design zero gap, to ensure the installation accuracy of the door panel, built-in bushing, to prevent friction from dust, with silent, load-bearing and light resistance
Uses: Generally suitable for testing equipment, environmental protection, semiconductors, visual inspection, lithium batteries, food equipment and other automated sheet metal frames
Remarks: Not limited by door panel thickness

特征说明：

- 材　　质：SUS不锈钢主体，SUS卡簧，销轴，POM衬套
- 表面处理：ADC/SUS，砂面、镜面、黑色、白色
- 结构功能：铰链轴心设计零缝隙，保证门板安装精度，内置衬套，防止摩擦产生尘粉，具有静音，承重，轻阻力
- 用　　途：一般适用于检测设备、环保、半导体、视觉检测、锂电、食品设备等自动化钣金框架
- 备　　注：不受门板厚度限制

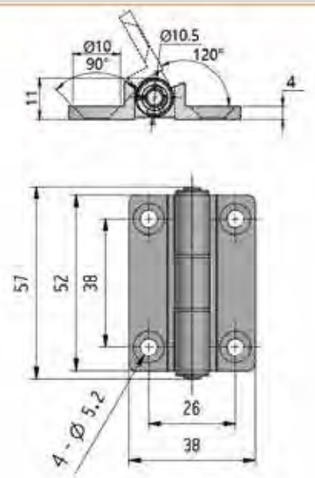

HL3852-3826X

Feature Description:

Material: SUS stainless steel body, SUS circlip, pin shaft, POM bushing
Surface treatment: ADC/SUS, sand, mirror, black, white
Structural function: hinge shaft design zero gap, to ensure the installation accuracy of the door panel, built-in bushing, to prevent friction from dust, with silent, load-bearing and light resistance
Uses: Generally suitable for testing equipment, environmental protection, semiconductors, visual inspection, lithium batteries, food equipment and other automated sheet metal frames
Remarks: Not limited by door panel thickness

特征说明：

- 材　　质：SUS不锈钢主体，SUS卡簧，销轴，POM衬套
- 表面处理：ADC/SUS，砂面、镜面、黑色、白色
- 结构功能：铰链轴心设计零缝隙，保证门板安装精度，内置衬套，防止摩擦产生尘粉，具有静音，承重，轻阻力
- 用　　途：一般适用于检测设备、环保、半导体、视觉检测、锂电、食品设备等自动化钣金框架
- 备　　注：不受门板厚度限制

把手锁 Handle lock
圆柱锁 Cylinder lock
平面锁 Plane lock
连杆锁 Rod control lock
面板锁 Panel lock
搭扣锁 Tonggle and hook
拉手 Handles
限位 Door stop
铰链 Hinge
冷库把手 Handle latch
磁吸 Magnet catch
附件 Accessories

地址：广东省肇庆市高要区金利镇都播工业区　电话：13929897256　邮箱：526202547@qq.com
Add: Dubo Industrial Zone, Jinli Town, Gaoyao District, Zhaoqing City, Guangdong Province　TEL: 13929897256　Email: 526202547@qq.com

HL4778-303263

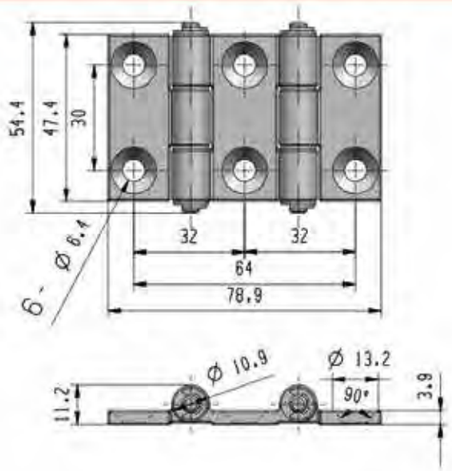

特征说明:

- 材　　质：SUS不锈钢主体，SUS卡簧，铜轴，POM衬套
- 表面处理：ADC/SUS，砂面，镜面，黑色，白色
- 结构功能：铰链轴心设计零缝隙，保证门板安装精度，内置衬套，防止摩擦产生尘粉，具有静音，承重，轻阻力
- 用　　途：一般适用于检测设备，环保，半导体，视觉检测，锂电，食品设备等自动化钣金框架
- 备　　注：不受门板厚度限制

Feature Description:

Material: SUS stainless steel body, SUS circlip, pin shaft, POM bushing
Surface treatment: ADC/SUS, sand, mirror, black, white
Structural function: hinge shaft design zero gap, to ensure the installation accuracy of the door panel, built-in bushing, to prevent friction from dust, with silent, load-bearing and light resistance
Uses: Generally suitable for testing equipment, environmental protection, semiconductors, visual inspection, lithium batteries, food equipment and other automated sheet metal frames
Remarks: Not limited by door panel thickness

HL4778-273162

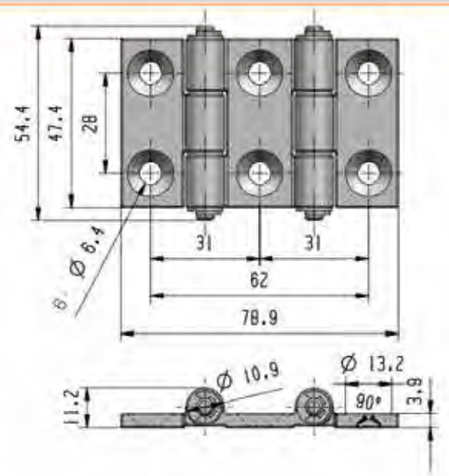

特征说明:

- 材　　质：SUS不锈钢主体，SUS卡簧，铜轴，POM衬套
- 表面处理：ADC/SUS，砂面，镜面，黑色，白色
- 结构功能：铰链轴心设计零缝隙，保证门板安装精度，内置衬套，防止摩擦产生尘粉，具有静音，承重，轻阻力
- 用　　途：一般适用于检测设备，环保，半导体，视觉检测，锂电，食品设备等自动化钣金框架
- 备　　注：不受门板厚度限制

Feature Description:

Material: SUS stainless steel body, SUS circlip, pin shaft, POM bushing
Surface treatment: ADC/SUS, sand, mirror, black, white
Structural function: hinge shaft design zero gap, to ensure the installation accuracy of the door panel, built-in bushing, to prevent friction from dust, with silent, load-bearing and light resistance
Uses: Generally suitable for testing equipment, environmental protection, semiconductors, visual inspection, lithium batteries, food equipment and other automated sheet metal frames
Remarks: Not limited by door panel thickness

地址：广东省肇庆市高要区金利镇都播工业区　电话：13929897256　邮箱：526202547@qq.com
Add: Dubo Industrial Zone, Jinli Town, Gaoyao District, Zhaoqing City, Guangdong Province　TEL: 13929897256　Email: 526202547@qq.com

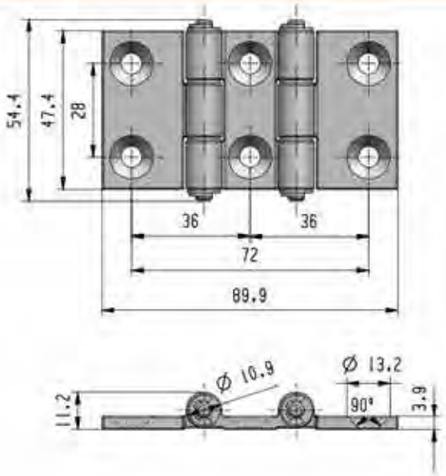

HL4790-283672

Feature Description:

Material: SUS stainless steel body, SUS circlip, pin shaft, POM bushing
Surface treatment: ADC/SUS, sand, mirror, black, white
Structural function: hinge shaft design zero gap, to ensure the installation accuracy of the door panel, built-in bushing, to prevent friction from dust, with silent, load-bearing and light resistance
Uses: Generally suitable for testing equipment, environmental protection, semiconductors, visual inspection, lithium batteries, food equipment and other automated sheet metal frames
Remarks: Not limited by door panel thickness

特征说明:

- 材　　质：SUS不锈钢主体，SUS卡簧，铜轴，POM衬套
- 表面处理：ADC/SUS，砂面，镜面，黑色，白色
- 结构功能：铰链轴心设计零缝隙，保证门板安装精度，内置衬套，防止摩擦产生尘粉，具有静音，承重，轻阻力
- 用　　途：一般适用于检测设备，环保，半导体，视觉检测，锂电，食品设备等自动化钣金框架
- 备　　注：不受门板厚度限制

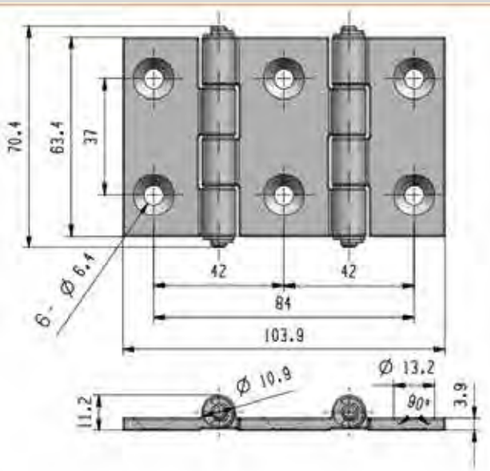

HL63103-374284

Feature Description:

Material: SUS stainless steel body, SUS circlip, pin shaft, POM bushing
Surface treatment: ADC/SUS, sand, mirror, black, white
Structural function: hinge shaft design zero gap, to ensure the installation accuracy of the door panel, built-in bushing, to prevent friction from dust, with silent, load-bearing and light resistance
Uses: Generally suitable for testing equipment, environmental protection, semiconductors, visual inspection, lithium batteries, food equipment and other automated sheet metal frames
Remarks: Not limited by door panel thickness

特征说明:

- 材　　质：SUS不锈钢主体，SUS卡簧，铜轴，POM衬套
- 表面处理：ADC/SUS，砂面，镜面，黑色，白色
- 结构功能：铰链轴心设计零缝隙，保证门板安装精度，内置衬套，防止摩擦产生尘粉，具有静音，承重，轻阻力
- 用　　途：一般适用于检测设备，环保，半导体，视觉检测，锂电，食品设备等自动化钣金框架
- 备　　注：不受门板厚度限制

地址：广东省肇庆市高要区金利镇都播工业区　电话：13929897256　邮箱：526202547@qq.com
Add: Dubo Industrial Zone, Jinli Town, Gaoyao District, Zhaoqing City, Guangdong Province　TEL: 13929897256　Email: 526202547@qq.com

HL63103-374284

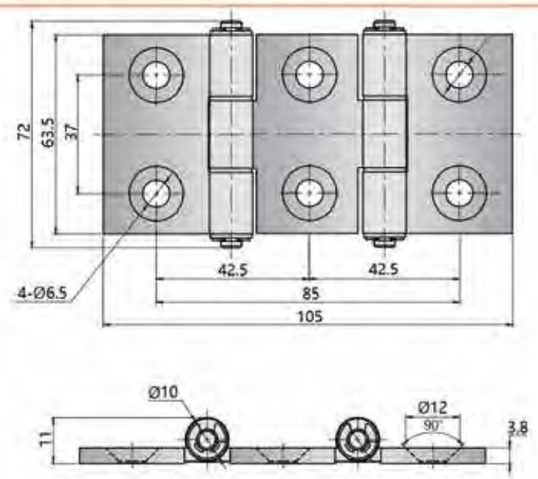

特征说明:

- 材　　质：SUS不锈钢主体，SUS卡簧，铜轴，POM衬套
- 表面处理：ADC/SUS，砂面、镜面、黑色、白色
- 结构功能：铰链轴心设计零缝隙，保证门板安装精度，内置衬套，防止摩擦产生尘粉，具有静音、承重、轻阻力
- 用　　途：一般适用于检测设备，环保、半导体、视觉检测、锂电、食品设备等自动化板金框架
- 备　　注：不受门板厚度限制

Feature Description:

Material: SUS stainless steel body, SUS circlip, pin shaft, POM bushing
Surface treatment: ADC/SUS, sand, mirror, black, white
Structural function: hinge shaft design zero gap, to ensure the installation accuracy of the door panel, built-in bushing, to prevent friction from dust, with silent, load-bearing and light resistance
Uses: Generally suitable for testing equipment, environmental protection, semiconductors, visual inspection, lithium batteries, food equipment and other automated sheet metal frames
Remarks: Not limited by door panel thickness

HL7890-563672

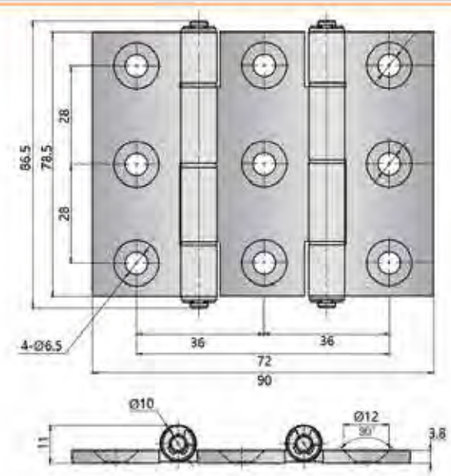

特征说明:

- 材　　质：SUS不锈钢主体，SUS卡簧，铜轴，POM衬套
- 表面处理：ADC/SUS，砂面、镜面、黑色、白色
- 结构功能：铰链轴心设计零缝隙，保证门板安装精度，内置衬套，防止摩擦产生尘粉，具有静音、承重、轻阻力
- 用　　途：一般适用于检测设备，环保、半导体、视觉检测、锂电、食品设备等自动化板金框架
- 备　　注：不受门板厚度限制

Feature Description:

Material: SUS stainless steel body, SUS circlip, pin shaft, POM bushing
Surface treatment: ADC/SUS, sand, mirror, black, white
Structural function: hinge shaft design zero gap, to ensure the installation accuracy of the door panel, built-in bushing, to prevent friction from dust, with silent, load-bearing and light resistance
Uses: Generally suitable for testing equipment, environmental protection, semiconductors, visual inspection, lithium batteries, food equipment and other automated sheet metal frames
Remarks: Not limited by door panel thickness

地址：广东省肇庆市高要区金利镇都播工业区　电话：13929897256　邮箱：526202547@qq.com
Add: Dubo Industrial Zone, Jinli Town, Gaoyao District, Zhaoqing City, Guangdong Province　TEL: 13929897256　Email: 526202547@qq.com

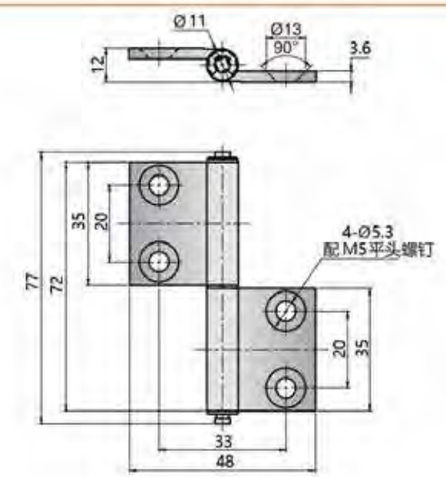

HL4735-2521C

Feature Description:

Material: SUS stainless steel body, SUS circlip, pin shaft, POM bushing
Surface treatment: ADC/SUS, sand, mirror, black, white
Structural function: hinge shaft design zero gap, to ensure the installation accuracy of the door panel, built-in bushing, to prevent friction from dust, with silent, load-bearing and light resistance
Uses: Generally suitable for testing equipment, environmental protection, semiconductors, visual inspection, lithium batteries, food equipment and other automated sheet metal frames
Remarks: Not limited by door panel thickness

特征说明:

- 材　　质：SUS不锈钢主体，SUS卡簧，铜轴，POM衬套
- 表面处理：ADC/SUS，砂面、镜面、黑色、白色
- 结构功能：铰链轴心设计零缝隙，保证门板安装精度，内置衬套，防止摩擦产生尘粉，具有静音、承重、轻阻力
- 用　　途：一般适用于检测设备，环保、半导体、视觉检测、锂电、食品设备等自动化板金框架
- 备　　注：不受门板厚度限制

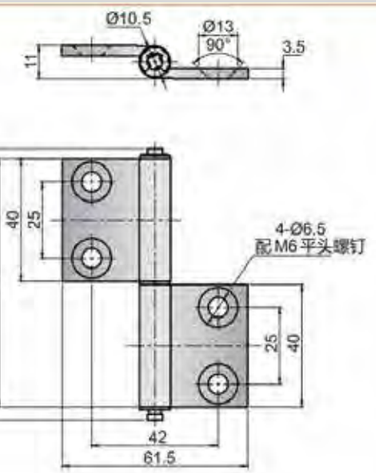

HL3640-2525C

Feature Description:

Material: SUS stainless steel body, SUS circlip, pin shaft, POM bushing
Surface treatment: ADC/SUS, sand, mirror, black, white
Structural function: hinge shaft design zero gap, to ensure the installation accuracy of the door panel, built-in bushing, to prevent friction from dust, with silent, load-bearing and light resistance
Uses: Generally suitable for testing equipment, environmental protection, semiconductors, visual inspection, lithium batteries, food equipment and other automated sheet metal frames
Remarks: Not limited by door panel thickness

特征说明:

- 材　　质：SUS不锈钢主体，SUS卡簧，铜轴，POM衬套
- 表面处理：ADC/SUS，砂面、镜面、黑色、白色
- 结构功能：铰链轴心设计零缝隙，保证门板安装精度，内置衬套，防止摩擦产生尘粉，具有静音、承重、轻阻力
- 用　　途：一般适用于检测设备，环保、半导体、视觉检测、锂电、食品设备等自动化板金框架
- 备　　注：不受门板厚度限制

地址：广东省肇庆市高要区金利镇都播工业区　电话：13929897256　邮箱：526202547@qq.com
Add: Dubo Industrial Zone, Jinli Town, Gaoyao District, Zhaoqing City, Guangdong Province　TEL: 13929897256　Email: 526202547@qq.com

HL4025-3220C

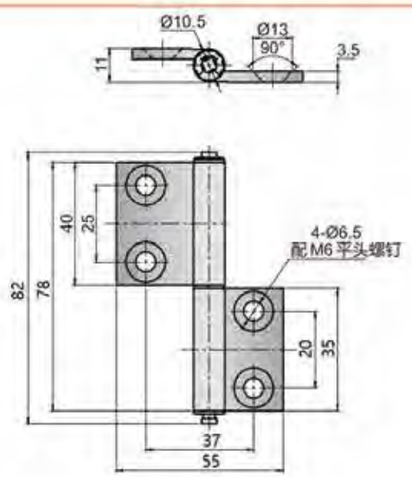

特征说明：

- 材　　质：SUS不锈钢主体，SUS卡簧，铜轴，POM衬套
- 表面处理：ADC/SUS，砂面、镜面、黑色、白色
- 结构功能：铰链轴心设计零缝隙，保证门板安装精度，内置衬套，防止摩擦产生尘粉，具有静音，承重，轻阻力
- 用　　途：一般适用于检测设备，环保，半导体，视觉检测，锂电，食品设备等自动化钣金框架
- 备　　注：不受门板厚度限制

Feature Description:

Material: SUS stainless steel body, SUS circlip, pin shaft, POM bushing
Surface treatment: ADC/SUS, sand, mirror, black, white
Structural function: hinge shaft design zero gap, to ensure the installation accuracy of the door panel, built-in bushing, to prevent friction from dust, with silent, load-bearing and light resistance
Uses: Generally suitable for testing equipment, environmental protection, semiconductors, visual inspection, lithium batteries, food equipment and other automated sheet metal frames
Remarks: Not limited by door panel thickness

HL4735-2521C

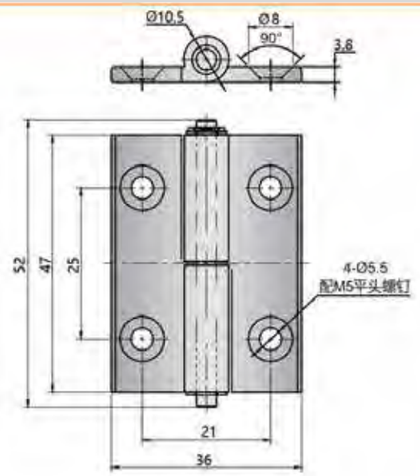

特征说明：

- 材　　质：SUS不锈钢主体，SUS卡簧，铜轴，POM衬套
- 表面处理：ADC/SUS，砂面、镜面、黑色、白色
- 结构功能：铰链轴心设计零缝隙，保证门板安装精度，内置衬套，防止摩擦产生尘粉，具有静音，承重，轻阻力
- 用　　途：一般适用于检测设备，环保，半导体，视觉检测，锂电，食品设备等自动化钣金框架
- 备　　注：不受门板厚度限制

Feature Description:

Material: SUS stainless steel body, SUS circlip, pin shaft, POM bushing
Surface treatment: ADC/SUS, sand, mirror, black, white
Structural function: hinge shaft design zero gap, to ensure the installation accuracy of the door panel, built-in bushing, to prevent friction from dust, with silent, load-bearing and light resistance
Uses: Generally suitable for testing equipment, environmental protection, semiconductors, visual inspection, lithium batteries, food equipment and other automated sheet metal frames
Remarks: Not limited by door panel thickness

地址：广东省肇庆市高要区金利镇都播工业区　电话：13929897256　邮箱：526202547@qq.com
Add: Dubo Industrial Zone, Jinli Town, Gaoyao District, Zhaoqing City, Guangdong Province　TEL: 13929897256　Email: 526202547@qq.com

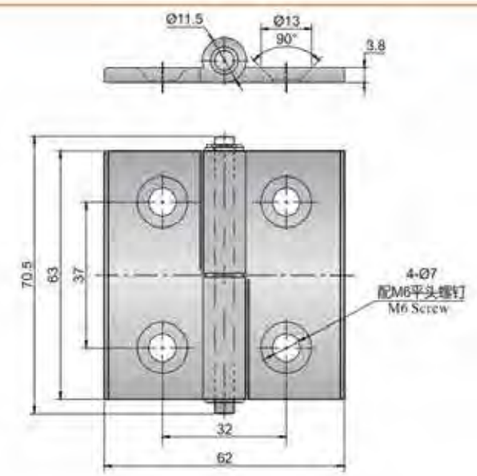

Feature Description:

Material: SUS stainless steel body, SUS circlip, pin shaft, POM bushing
Surface treatment: ADC/SUS, sand, mirror, black, white
Structural function: hinge shaft design zero gap, to ensure the installation accuracy of the door panel, built-in bushing, to prevent friction from dust, with silent, load-bearing and light resistance
Uses: Generally suitable for testing equipment, environmental protection, semiconductors, visual inspection, lithium batteries, food equipment and other automated sheet metal frames
Remarks: Not limited by door panel thickness

HL4747-3032C

特征说明：

- 材　　质：SUS不锈钢主体，SUS卡簧，铜轴，POM衬套
- 表面处理：ADC/SUS，砂面、镜面、黑色、白色
- 结构功能：铰链轴心设计零缝隙，保证门板安装精度，内置衬套，防止摩擦产生尘粉，具有静音，承重，轻阻力
- 用　　途：一般适用于检测设备，环保，半导体，视觉检测，锂电，食品设备等自动化钣金框架
- 备　　注：不受门板厚度限制

Feature Description:

Material: SUS stainless steel body, SUS circlip, pin shaft, POM bushing
Surface treatment: ADC/SUS, sand, mirror, black, white
Structural function: hinge shaft design zero gap, to ensure the installation accuracy of the door panel, built-in bushing, to prevent friction from dust, with silent, load-bearing and light resistance
Uses: Generally suitable for testing equipment, environmental protection, semiconductors, visual inspection, lithium batteries, food equipment and other automated sheet metal frames
Remarks: Not limited by door panel thickness

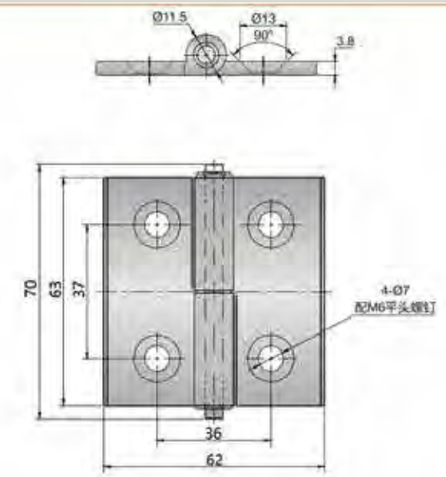

HL6361-3735C

特征说明：

- 材　　质：SUS不锈钢主体，SUS卡簧，铜轴，POM衬套
- 表面处理：ADC/SUS，砂面、镜面、黑色、白色
- 结构功能：铰链轴心设计零缝隙，保证门板安装精度，内置衬套，防止摩擦产生尘粉，具有静音，承重，轻阻力
- 用　　途：一般适用于检测设备，环保，半导体，视觉检测，锂电，食品设备等自动化钣金框架
- 备　　注：不受门板厚度限制

Feature Description:

Material: SUS stainless steel body, SUS circlip, pin shaft, POM bushing
Surface treatment: ADC/SUS, sand, mirror, black, white
Structural function: hinge shaft design zero gap, to ensure the installation accuracy of the door panel, built-in bushing, to prevent friction from dust, with silent, load-bearing and light resistance
Uses: Generally suitable for testing equipment, environmental protection, semiconductors, visual inspection, lithium batteries, food equipment and other automated sheet metal frames
Remarks: Not limited by door panel thickness

地址：广东省肇庆市高要区金利镇都播工业区　电话：13929897256　邮箱：526202547@qq.com
Add: Dubo Industrial Zone, Jinli Town, Gaoyao District, Zhaoqing City, Guangdong Province　TEL: 13929897256　Email: 526202547@qq.com

把手锁 Handle lock
圆柱锁 Cylinder lock
平面锁 Plane lock
连杆锁 Rod control lock
面板锁 Panel lock
搭扣锁 Tonggle and hook
拉手 Handles
限位 Door stop
铰链 Hinge
冷库把手 Handle latch
磁吸 Magnet catch
附件 Accessories

HL5050-3030

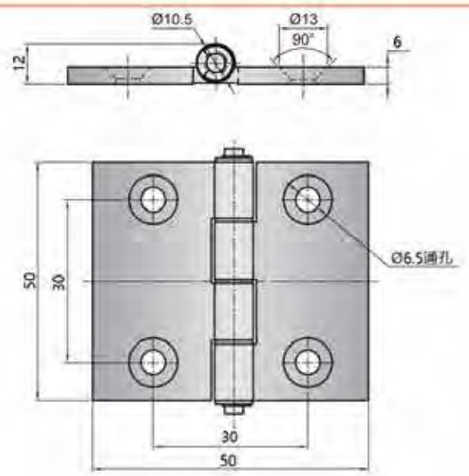

特征说明:

- 材　质：SUS不锈钢主体，SUS卡簧，钢轴
- 表面处理：镜面
- 结构功能：铰链轴心设计零间隙，保证门板安装精度，内置衬套，防止摩擦产生尘粉，具有静音，承重，轻阻力
- 用　途：一般适用于检测设备，环保，半导体，视觉检测，锂电，食品设备等自动化钣金框架
- 备　注：不受门板厚度限制

Feature Description:

Material: SUS stainless steel body, SUS circlip, pin shaft
Surface treatment: mirror
Structural function: hinge shaft design zero gap, to ensure the installation accuracy of the door panel, built-in bushing, to prevent friction from dust, with silent, load-bearing and light resistance
Uses: Generally suitable for testing equipment, environmental protection, semiconductors, visual inspection, lithium batteries, food equipment and other automated sheet metal frames
Remarks: Not limited by door panel thickness

HL6565-3540

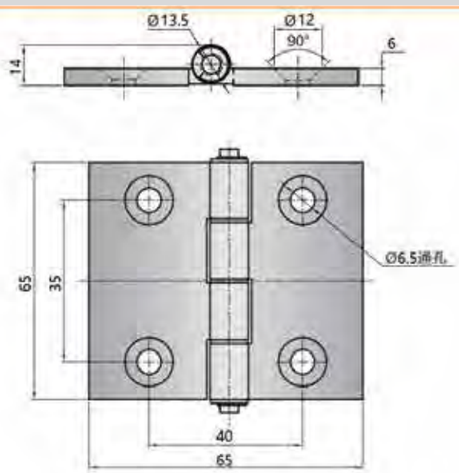

特征说明:

- 材　质：SUS不锈钢主体，SUS卡簧，钢轴
- 表面处理：镜面
- 结构功能：铰链轴心设计零间隙，保证门板安装精度，内置衬套，防止摩擦产生尘粉，具有静音，承重，轻阻力
- 用　途：一般适用于检测设备，环保，半导体，视觉检测，锂电，食品设备等自动化钣金框架
- 备　注：不受门板厚度限制

Feature Description:

Material: SUS stainless steel body, SUS circlip, pin shaft
Surface treatment: mirror
Structural function: hinge shaft design zero gap, to ensure the installation accuracy of the door panel, built-in bushing, to prevent friction from dust, with silent, load-bearing and light resistance
Uses: Generally suitable for testing equipment, environmental protection, semiconductors, visual inspection, lithium batteries, food equipment and other automated sheet metal frames
Remarks: Not limited by door panel thickness

地址：广东省肇庆市高要区金利镇都播工业区　电话：13929897256　邮箱：526202547@qq.com
Add: Dubo Industrial Zone, Jinli Town, Gaoyao District, Zhaoqing City, Guangdong Province　TEL: 13929897256　Email: 526202547@qq.com

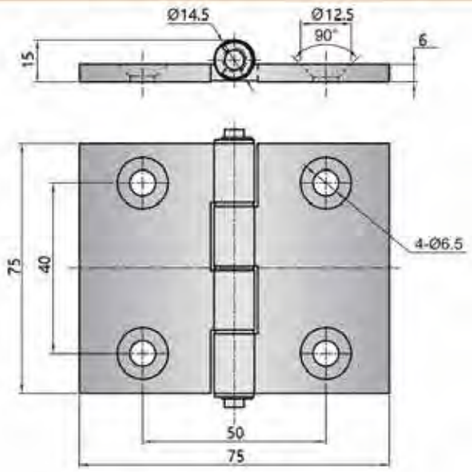

HL7575-4050

Feature Description:

Material: SUS stainless steel body, SUS circlip, pin shaft
Surface treatment: mirror
Structural function: hinge shaft design zero gap, to ensure the installation accuracy of the door panel, built-in bushing, to prevent friction from dust, with silent, load-bearing and light resistance
Uses: Generally suitable for testing equipment, environmental protection, semiconductors, visual inspection, lithium batteries, food equipment and other automated sheet metal frames
Remarks: Not limited by door panel thickness

特征说明:

- 材　质：SUS不锈钢主体，SUS卡簧，钢轴
- 表面处理：镜面
- 结构功能：铰链轴心设计零间隙，保证门板安装精度，内置衬套，防止摩擦产生尘粉，具有静音，承重，轻阻力
- 用　途：一般适用于检测设备，环保，半导体，视觉检测，锂电，食品设备等自动化钣金框架
- 备　注：不受门板厚度限制

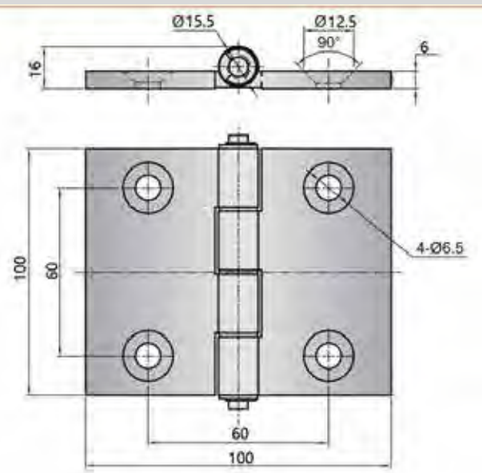

HL100100-6060

Feature Description:

Material: SUS stainless steel body, SUS circlip, pin shaft
Surface treatment: mirror
Structural function: hinge shaft design zero gap, to ensure the installation accuracy of the door panel, built-in bushing, to prevent friction from dust, with silent, load-bearing and light resistance
Uses: Generally suitable for testing equipment, environmental protection, semiconductors, visual inspection, lithium batteries, food equipment and other automated sheet metal frames
Remarks: Not limited by door panel thickness

特征说明:

- 材　质：SUS不锈钢主体，SUS卡簧，钢轴
- 表面处理：镜面
- 结构功能：铰链轴心设计零间隙，保证门板安装精度，内置衬套，防止摩擦产生尘粉，具有静音，承重，轻阻力
- 用　途：一般适用于检测设备，环保，半导体，视觉检测，锂电，食品设备等自动化钣金框架
- 备　注：不受门板厚度限制

地址：广东省肇庆市高要区金利镇都播工业区　电话：13929897256　邮箱：526202547@qq.com
Add: Dubo Industrial Zone, Jinli Town, Gaoyao District, Zhaoqing City, Guangdong Province　TEL: 13929897256　Email: 526202547@qq.com

HL75-4050CB

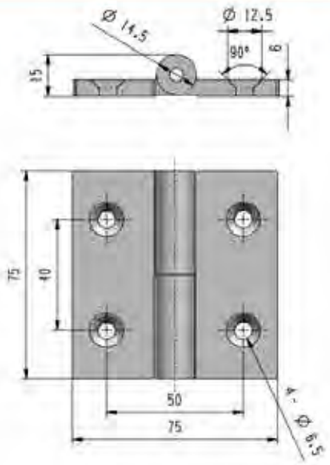

特征说明:

- 材　　质：SUS不锈钢主体、SUS卡簧、钢轴
- 表面处理：镜面
- 结构功能：铰链轴心设计零缝隙，保证门板安装精度，内置衬套，防止灰尘产生尘粉，具有静音、承重、轻阻力
- 用　　途：一般适用于检测设备、环保、半导体、视觉检测、锂电、食品设备等自动化钣金框架
- 备　　注：不受门板厚度限制

Feature Description:

Material: SUS stainless steel body, SUS circlip, pin shaft
Surface treatment: mirror
Structural function: hinge shaft design zero gap, to ensure the installation accuracy of the door panel, built-in bushing, to prevent friction from dust, with silent, load-bearing and light resistance
Uses: Generally suitable for testing equipment, environmental protection, semiconductors, visual inspection, lithium batteries, food equipment and other automated sheet metal frames
Remarks: Not limited by door panel thickness

HL100-3060CB

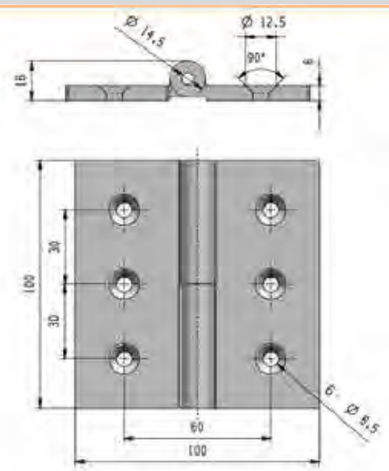

特征说明:

- 材　　质：SUS不锈钢主体、SUS卡簧、钢轴
- 表面处理：镜面
- 结构功能：铰链轴心设计零缝隙，保证门板安装精度，内置衬套，防止灰尘产生尘粉，具有静音、承重、轻阻力
- 用　　途：一般适用于检测设备、环保、半导体、视觉检测、锂电、食品设备等自动化钣金框架
- 备　　注：不受门板厚度限制

Feature Description:

Material: SUS stainless steel body, SUS circlip, pin shaft
Surface treatment: mirror
Structural function: hinge shaft design zero gap, to ensure the installation accuracy of the door panel, built-in bushing, to prevent friction from dust, with silent, load-bearing and light resistance
Uses: Generally suitable for testing equipment, environmental protection, semiconductors, visual inspection, lithium batteries, food equipment and other automated sheet metal frames
Remarks: Not limited by door panel thickness

地址：广东省肇庆市高要区金利镇都播工业区　电话：13929897256　邮箱：526202547@qq.com
Add: Dubo Industrial Zone, Jinli Town, Gaoyao District, Zhaoqing City, Guangdong Province　TEL: 13929897256　Email: 526202547@qq.com

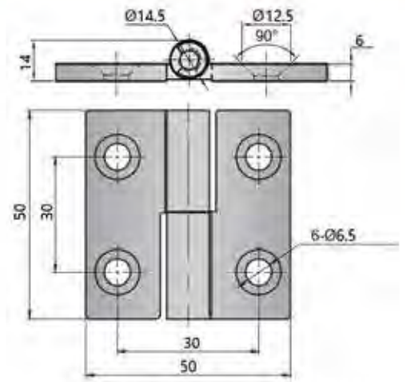

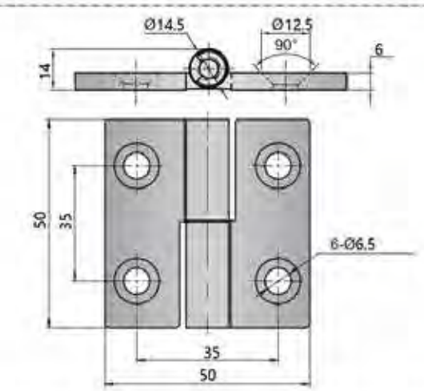

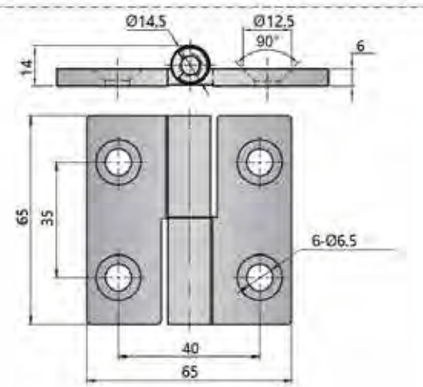

HL5050-3030CB

HL5050-3535CB

HL6565-3540CB

Feature Description:

Material: SUS stainless steel body, SUS circlip, pin shaft
Surface treatment: mirror
Structural function: hinge shaft design zero gap, to ensure the installation accuracy of the door panel, built-in bushing, to prevent friction from dust, with silent, load-bearing and light resistance
Uses: Generally suitable for testing equipment, environmental protection, semiconductors, visual inspection, lithium batteries, food equipment and other automated sheet metal frames
Remarks: Not limited by door panel thickness

特征说明:

- 材　　质：SUS不锈钢主体、SUS卡簧、钢轴
- 表面处理：镜面
- 结构功能：铰链轴心设计零缝隙，保证门板安装精度，内置衬套，防止灰尘产生尘粉，具有静音、承重、轻阻力
- 用　　途：一般适用于检测设备、环保、半导体、视觉检测、锂电、食品设备等自动化钣金框架
- 备　　注：不受门板厚度限制

把手锁 Handle lock
圆柱锁 Cylinder lock
平面锁 Plane lock
连杆锁 Rod control lock
面板锁 Panel lock
搭扣锁 Tonggle and hook
拉手 Handles
限位 Door stop
铰链 Hinge
冷库把手 Handle latch
磁吸 Magnet catch
附件 Accessories

地址：广东省肇庆市高要区金利镇都播工业区　电话：13929897256　邮箱：526202547@qq.com
Add: Dubo Industrial Zone, Jinli Town, Gaoyao District, Zhaoqing City, Guangdong Province　TEL: 13929897256　Email: 526202547@qq.com

HL5050-2035C

HL6565-3540C

HL7575-4050C

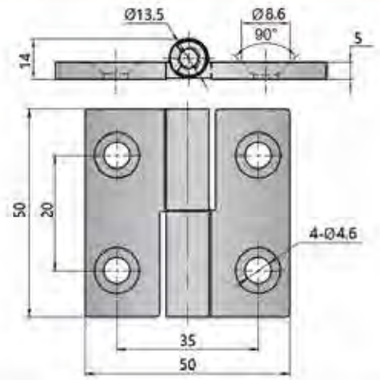

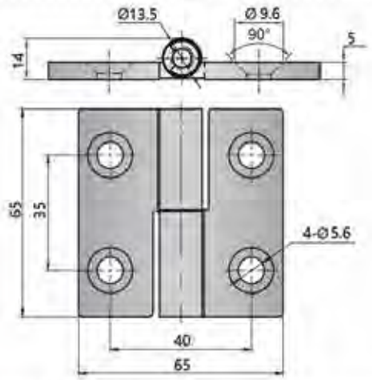

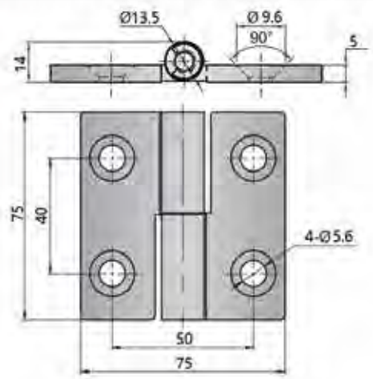

特征说明:

- 材　　质：SUS不锈钢主体，SUS卡簧，钢轴，POM衬套
- 表面处理：镜面
- 结构功能：铰链轴心设计零缝隙，保证门板安装精度，内置衬套，防止摩擦产生尘粉，具有静音，承重，耐磨力
- 用　　途：一般适用于检测设备、环保、半导体、视觉检测、锂电、食品设备等自动化钣金框架
- 备　　注：不受门板厚度限制

Feature Description:

Material: SUS stainless steel body, SUS circlip, pin shaft, POM bushing
Surface treatment: mirror
Structural function: hinge shaft design zero gap, to ensure the installation accuracy of the door panel, built-in bushing, to prevent friction from dust, with silent, load-bearing and light resistance
Uses: Generally suitable for testing equipment, environmental protection, semiconductors, visual inspection, lithium batteries, food equipment and other automated sheet metal frames
Remarks: Not limited by door panel thickness

地址：广东省肇庆市高要区金利镇都播工业区　电话：13929897256　邮箱：526202547@qq.com
Add: Dubo Industrial Zone, Jinli Town, Gaoyao District, Zhaoqing City, Guangdong Province　TEL: 13929897256　Email: 526202547@qq.com

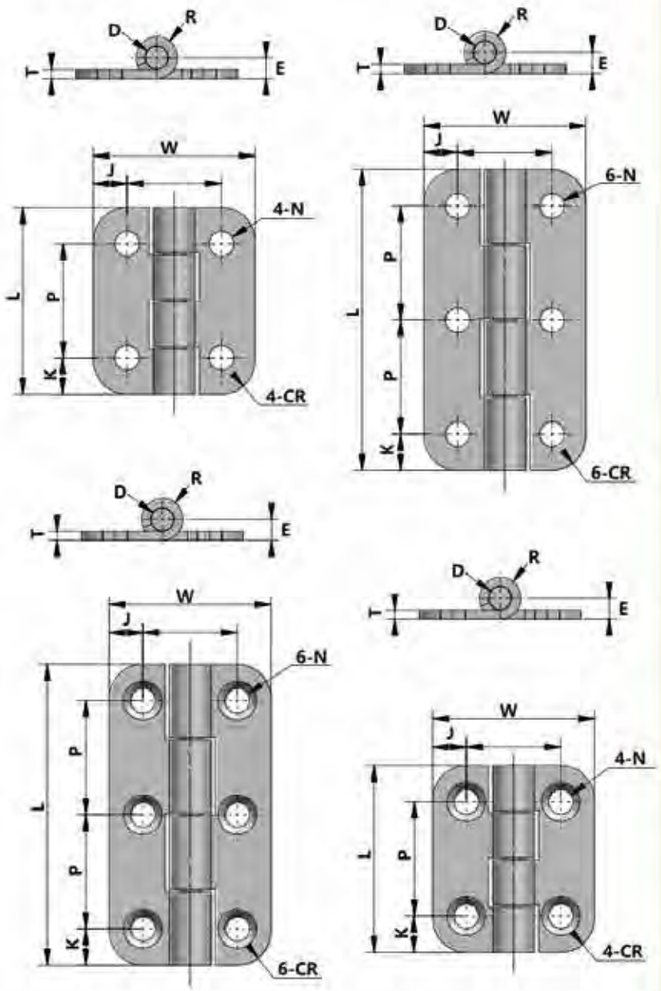

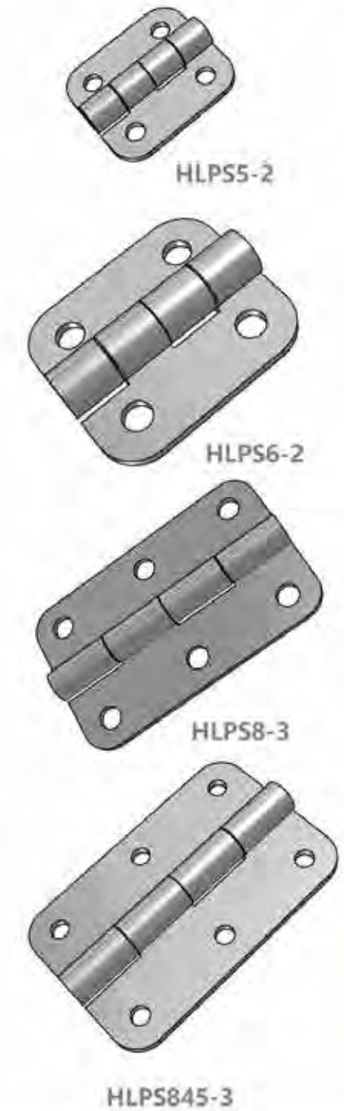

HLPS5-2

HLPS6-2

HLPS8-3

HLPS845-3

Feature Description:

Material: SPCC/SUS material
Surface treatment: SPCC galvanized, SUS brushed
Structural function: exposed ammonium chain, fixed by screws, easy to install and disassemble Quick and easy
Uses: generally used in chassis cabinets, electrical cabinets, mechanical equipment, automation equipment sheet metal boxes
Remarks: Applicable door panel thickness 1-3mm

特征说明:

- 材　　质：SPCC/SUS材质
- 表面处理：SPCC镀锌，SUS拉丝
- 结构功能：明挂铵链，通过螺丝固定，安装拆卸简易快捷方便
- 用　　途：一般使用于资讯机箱机柜、电箱电柜、机械机床设备等钣金箱体使用
- 备　　注：适用门板厚度1-3mm

把手锁 Handle lock
圆柱锁 Cylinder lock
平面锁 Plane lock
连杆锁 lock Rod control
面板锁 Panel lock
搭扣锁 hook Tonggle and
拉手 Handles
限位 Door stop
铰链 Hinge
冷库把手 Handle latch
磁吸 Magnet catch
附件 Accessories

地址：广东省肇庆市高要区金利镇都播工业区　电话：13929897256　邮箱：526202547@qq.com
Add: Dubo Industrial Zone, Jinli Town, Gaoyao District, Zhaoqing City, Guangdong Province　TEL: 13929897256　Email: 526202547@qq.com

HLSNA-5

HLSNA-6

HLSNA-8

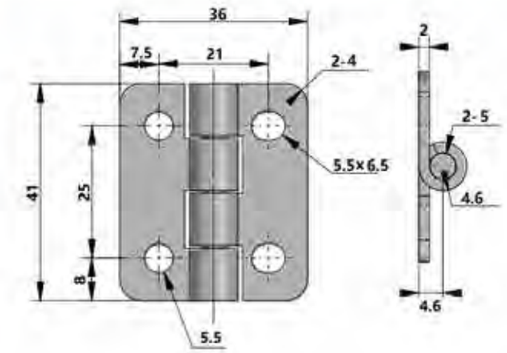

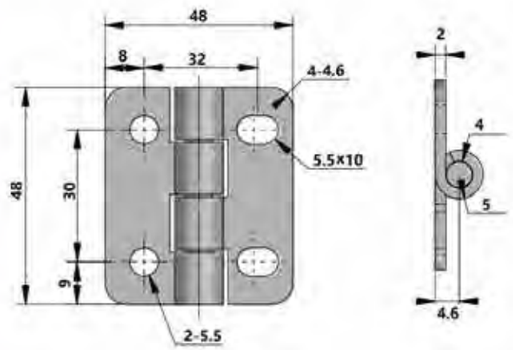

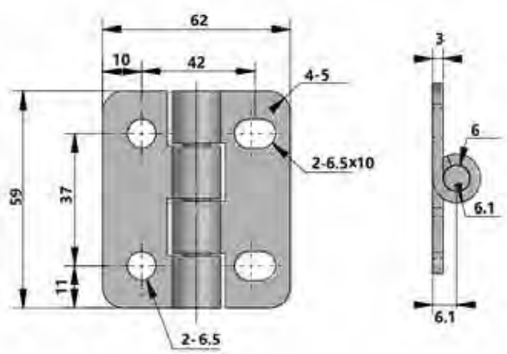

特征说明:

- 材　　质: SPCC/SUS材质
- 表面处理: SPCC镀锌、SUS拉丝
- 结构功能: 明装铰链，通过螺丝固定，安装拆卸简易快捷方便
- 用　　途: 一般使用于通讯机箱机柜、电箱电柜、机械机床设备等钣金箱体使用
- 备　　注: 适用门板厚度1-3mm

Feature Description:

Material: SPCC/SUS material
Surface treatment: SPCC galvanized, SUS brushed
Structural function: exposed ammonium chain, fixed by screws, easy to install and disassemble Quick and easy
Uses: generally used in chassis cabinets, electrical cabinets, mechanical equipment, automation equipment sheet metal boxes
Remarks: Applicable door panel thickness 1–3mm

地址：广东省肇庆市高要区金利镇都播工业区　电话：13929897256　邮箱：526202547@qq.com
Add: Dubo Industrial Zone, Jinli Town, Gaoyao District, Zhaoqing City, Guangdong Province　TEL: 13929897256　Email: 526202547@qq.com

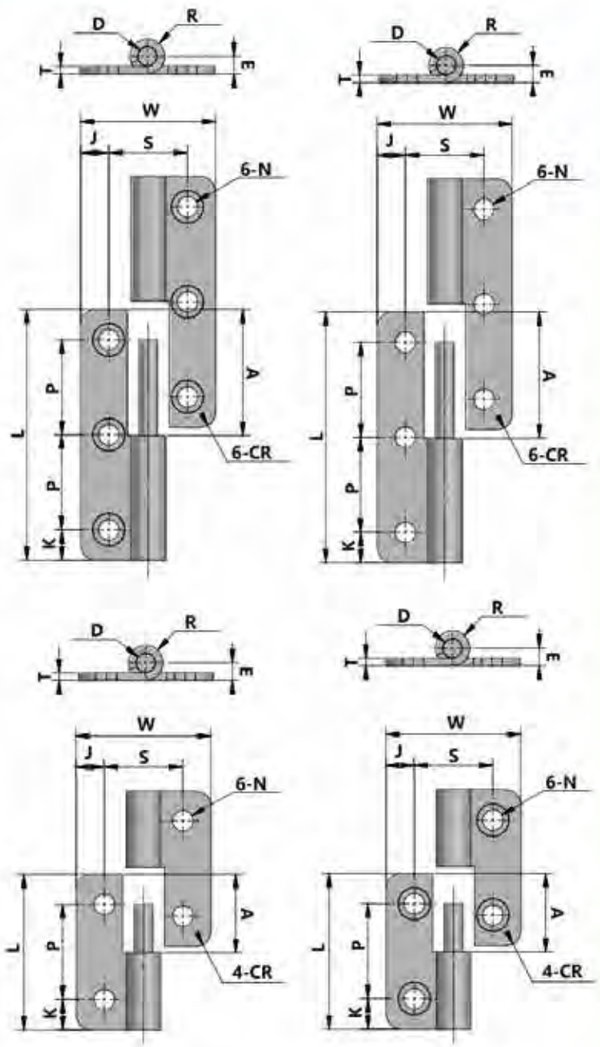

HLPSL5-2

HLPSL5-3

HLPSL6-2

HLPSL8-3

Feature Description:

Material: SPCC/SUS material
Surface treatment: SPCC galvanized, SUS brushed
Structural function: exposed ammonium chain, fixed by screws, easy to install and disassemble Quick and easy
Uses: generally used in chassis cabinets, electrical cabinets, mechanical equipment, automation equipment sheet metal boxes
Remarks: Applicable door panel thickness 1–3mm

特征说明:

- 材　　质: SPCC/SUS材质
- 表面处理: SPCC镀锌、SUS拉丝
- 结构功能: 明装铰链，通过螺丝固定，安装拆卸简易快捷方便
- 用　　途: 一般使用于通讯机箱机柜、电箱电柜、机械机床设备等钣金箱体使用
- 备　　注: 适用门板厚度1-3mm

地址：广东省肇庆市高要区金利镇都播工业区　电话：13929897256　邮箱：526202547@qq.com
Add: Dubo Industrial Zone, Jinli Town, Gaoyao District, Zhaoqing City, Guangdong Province　TEL: 13929897256　Email: 526202547@qq.com

把手锁 Handle lock
圆柱锁 Cylinder lock
平面锁 Plane lock
连杆锁 Rod control lock
面板锁 Panel lock
搭扣锁 Tonggle and hook
拉手 Handles
限位 Door stop
铰链 Hinge
冷库把手 Handle latch
磁吸 Magnet catch
附件 Accessories

HL2036S

HL2834S

HL2875S

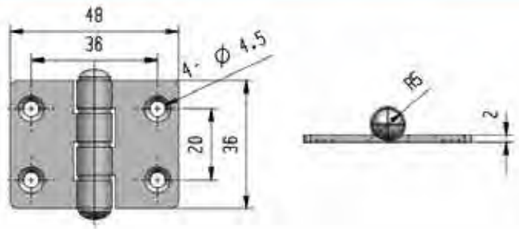

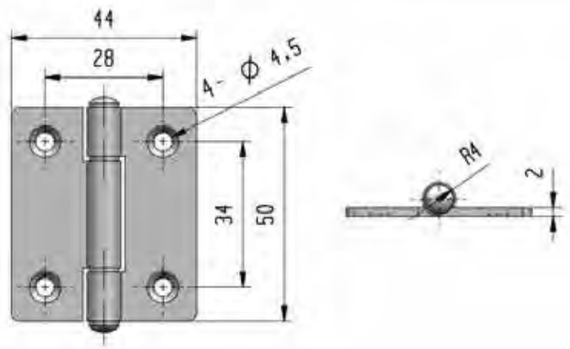

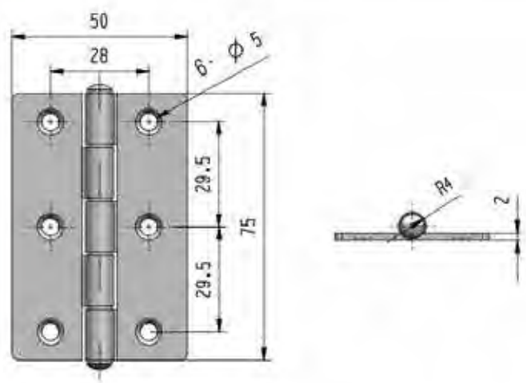

特征说明:

- 材　　质: SPCC/SUS材质
- 表面处理: SPCC镀锌，SUS拉丝
- 结构功能: 明装铰链，通过螺丝固定，安装拆卸简易快捷方便
- 用　　途: 一般使用于通讯机箱机柜，电箱电柜，机械机床设备等板金箱体使用
- 备　　注: 适用门板厚度1-3mm

Feature Description:

Material: SPCC/SUS material
Surface treatment: SPCC galvanized, SUS brushed
Structural function: exposed ammonium chain, fixed by screws, easy to install and disassemble Quick and easy
Uses: generally used in chassis cabinets, electrical cabinets, mechanical equipment, automation equipment sheet metal boxes
Remarks: Applicable door panel thickness 1−3mm

地址：广东省肇庆市高要区金利镇都播工业区　电话：13929897256　邮箱：526202547@qq.com
Add: Dubo Industrial Zone, Jinli Town, Gaoyao District, Zhaoqing City, Guangdong Province　TEL: 13929897256　Email: 526202547@qq.com

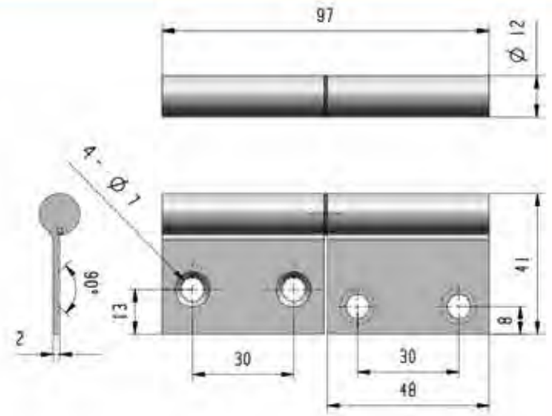

HL4897S

Feature Description:

Material: SPCC/SUS material
Surface treatment: SPCC galvanized, SUS brushed
Structural function: exposed ammonium chain, fixed by screws, easy to install and disassemble Quick and easy
Uses: generally used in chassis cabinets, electrical cabinets, mechanical equipment, automation equipment sheet metal boxes
Remarks: Applicable door panel thickness 1−3mm

特征说明:

- 材　　质: SPCC/SUS材质
- 表面处理: SPCC镀锌，SUS拉丝
- 结构功能: 明装铰链，通过螺丝固定，安装拆卸简易快捷方便
- 用　　途: 一般使用于通讯机箱机柜，电箱电柜，机械机床设备等板金箱体使用
- 备　　注: 适用门板厚度1-3mm

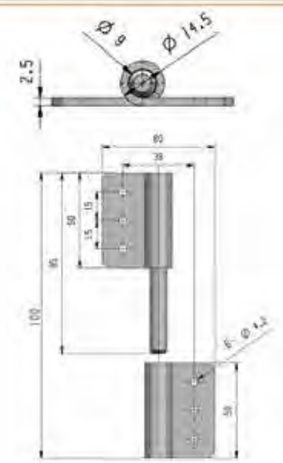

HL5095S

Feature Description:

Material: SPCC/SUS material
Surface treatment: SPCC galvanized, SUS brushed
Structural function: exposed ammonium chain, fixed by screws, easy to install and disassemble Quick and easy
Uses: generally used in chassis cabinets, electrical cabinets, mechanical equipment, automation equipment sheet metal boxes
Remarks: Applicable door panel thickness 1−3mm

特征说明:

- 材　　质: SPCC/SUS材质
- 表面处理: SPCC镀锌，SUS拉丝
- 结构功能: 明装铰链，通过螺丝固定，安装拆卸简易快捷方便
- 用　　途: 一般使用于通讯机箱机柜，电箱电柜，机械机床设备等板金箱体使用
- 备　　注: 适用门板厚度1-3mm

地址：广东省肇庆市高要区金利镇都播工业区　电话：13929897256　邮箱：526202547@qq.com
Add: Dubo Industrial Zone, Jinli Town, Gaoyao District, Zhaoqing City, Guangdong Province　TEL: 13929897256　Email: 526202547@qq.com

把手锁 Handle lock
圆柱锁 Cylinder lock
平面锁 Plane lock
连杆锁 Rod control lock
面板锁 Panel lock
搭扣锁 Tonggle and hook

CT-1338

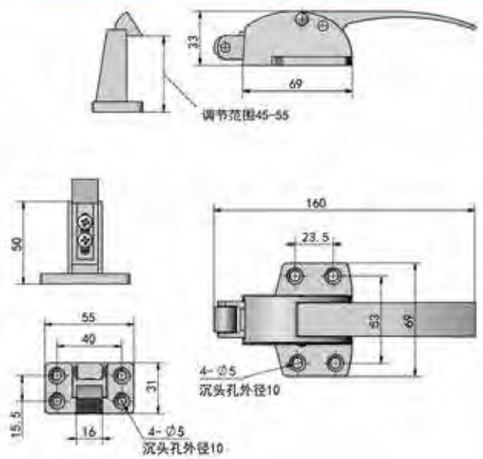

特别说明：

- 材　　质：ZDC锌合金/SUS不锈钢
- 表面处理：ZDC镀铬、SUS拉丝、镜面
- 结构功能：外露式碰撞把手锁，通过螺丝固定安装，锁舌配置弹簧自动回弹，基座高度可调节
- 用　　途：适用于冷库门、烤箱门、蒸箱、消毒柜及各种工业型箱体使用
- 备　　注：不受门板厚度限制

Feature Description:

Material: ZDC zinc alloy/SUS stainless steel
Surface treatment: ZDC chrome plating, SUS wire drawing, mirror surface
Structural function: exposed collision handle lock, fixed installation by screw, lock tongue configuration spring automatic rebound, base height adjustable
Uses: Suitable for cold storage doors, oven doors, steamers, disinfection cabinets and various industrial boxes
Remarks:Not limited by door panel thickness

拉手 Handles
限位 Door stop
铰链 Hinge
冷库把手 Handle latch
磁吸 Magnet catch
附件 Accessories

CT-1338A

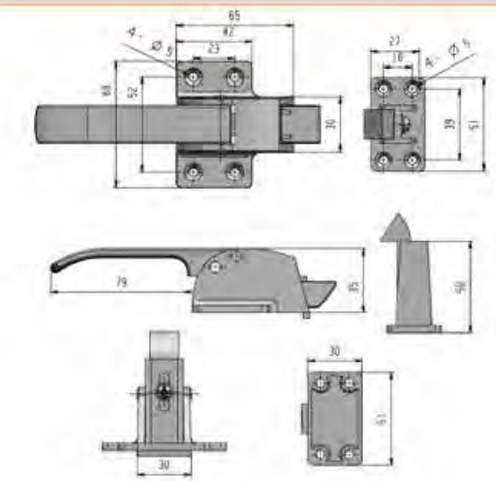

特别说明：

- 材　　质：SUS不锈钢
- 表面处理：SUS拉丝、镜面
- 结构功能：外露式碰撞把手锁，通过螺丝固定安装，锁舌配置弹簧自动回弹，基座高度可调节
- 用　　途：适用于冷库门、烤箱门、蒸箱、消毒柜及各种工业型箱体使用
- 备　　注：不受门板厚度限制

Feature Description:

Material: SUS stainless steel
Surface treatment: SUS wire drawing, mirror surface
Structural function: exposed collision handle lock, fixed installation by screw, lock tongue configuration spring automatic rebound, base height adjustable
Uses: Suitable for cold storage doors, oven doors, steamers, disinfection cabinets and various industrial boxes
Remarks: Not limited by door panel thickness

地址：广东省肇庆市高要区金利镇都播工业区　电话：13929897256　邮箱：526202547@qq.com
Add: Dubo Industrial Zone, Jinli Town, Gaoyao District, Zhaoqing City, Guangdong Province　TEL: 13929897256　Email: 526202547@qq.com

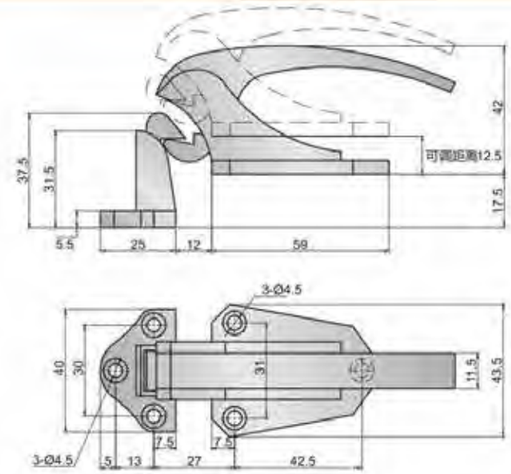

Feature Description:

Material: ZDC zinc alloy
Surface treatment: ZDC chrome plating
Structural function: exposed collision handle lock, fixed installation by screw, lock tongue configuration spring automatic rebound, base height adjustable
Uses: Suitable for cold storage doors, oven doors, steamers, disinfection cabinets and various industrial boxes
Remarks: Not limited by door panel thickness

CT-1339

特别说明：

- 材　　质：ZDC锌合金
- 表面处理：ZDC镀铬
- 结构功能：外露式碰撞把手锁，通过螺丝固定安装，锁舌配置弹簧自动回弹，基座高度可调节
- 用　　途：适用于冷库门、烤箱门、蒸箱、消毒柜及各种工业型箱体使用
- 备　　注：不受门板厚度限制

Feature Description:

Material: ZDC zinc alloy
Surface treatment: ZDC chrome plating
Structural function: exposed collision handle lock, fixed installation by screw, lock tongue configuration spring automatic rebound, base height adjustable
Uses: Suitable for cold storage doors, oven doors, steamers, disinfection cabinets and various industrial boxes
Remarks:Not limited by door panel thickness

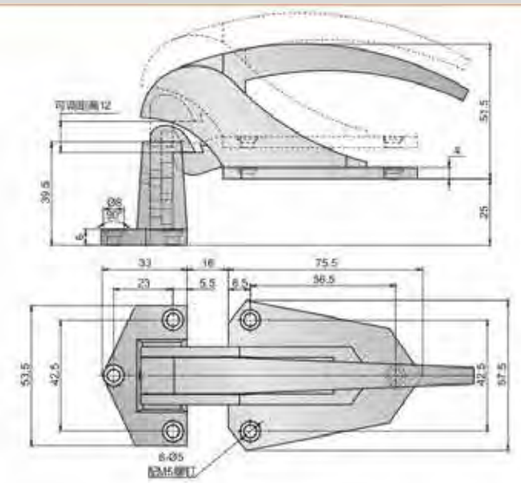

CT-1340

特别说明：

- 材　　质：ZDC锌合金
- 表面处理：ZDC镀铬
- 结构功能：外露式碰撞把手锁，通过螺丝固定安装，锁舌配置弹簧自动回弹，基座高度可调节
- 用　　途：适用于冷库门、烤箱门、蒸箱、消毒柜及各种工业型箱体使用
- 备　　注：不受门板厚度限制

Feature Description:

Material: ZDC zinc alloy
Surface treatment: ZDC chrome plating
Structural function: exposed collision handle lock, fixed installation by screw, lock tongue configuration spring automatic rebound, base height adjustable
Uses: Suitable for cold storage doors, oven doors, steamers, disinfection cabinets and various industrial boxes
Remarks:Not limited by door panel thickness

地址：广东省肇庆市高要区金利镇都播工业区　电话：13929897256　邮箱：526202547@qq.com
Add: Dubo Industrial Zone, Jinli Town, Gaoyao District, Zhaoqing City, Guangdong Province　TEL: 13929897256　Email: 526202547@qq.com

CT-1178

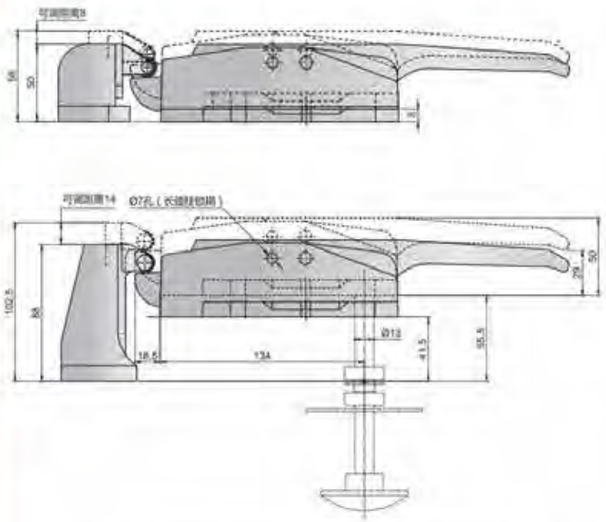

CT-1178S

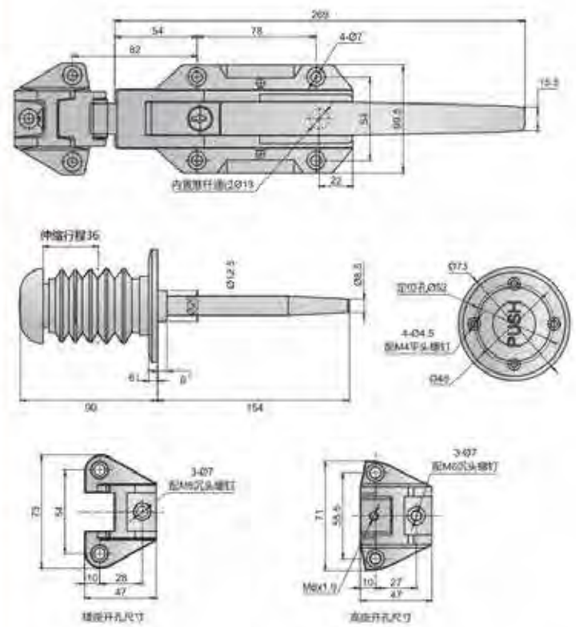

特别说明:

- 材　　质: ZDC锌合金/SUS不锈钢
- 表面处理: ZDC镀铬、SUS拉丝、镜面
- 结构功能: 外露式碰撞把手锁，通过螺丝固定安装，锁舌配置弹簧自动回弹，基座高度可调节
- 用　　途: 适用于冷库门、烤箱门、蒸箱、消毒柜及各种工业型箱体使用
- 备　　注: 不受门板厚度限制

Feature Description:

Material: ZDC zinc alloy/SUS stainless steel
Surface treatment: ZDC chrome plating, SUS wire drawing, mirror surface
Structural function: exposed collision handle lock, fixed installation by screw, lock tongue configuration spring automatic rebound, base height adjustable
Uses: Suitable for cold storage doors, oven doors, steamers, disinfection cabinets and various industrial boxes
Remarks: Not limited by door panel thickness

地址：广东省肇庆市高要区金利镇都播工业区　电话：13929897256　邮箱：526202547@qq.com
Add: Dubo Industrial Zone, Jinli Town, Gaoyao District, Zhaoqing City, Guangdong Province　TEL: 13929897256　Email: 526202547@qq.com

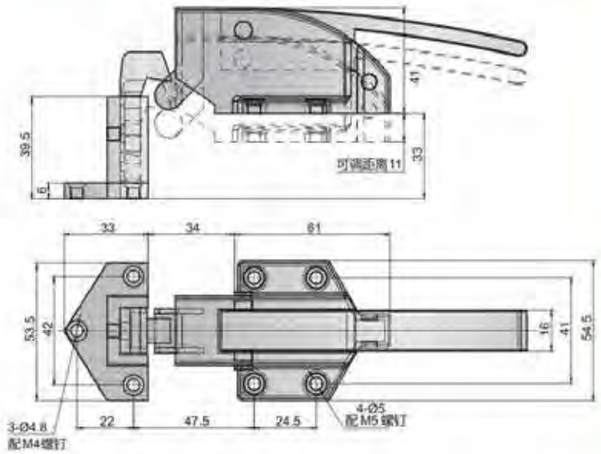

CT-1161

Feature Description:

Material: ZDC zinc alloy
Surface treatment: ZDC chrome plating
Structural function: exposed collision handle lock, fixed installation by screw, lock tongue configuration spring automatic rebound, base height adjustable
Uses: Suitable for cold storage doors, oven doors, steamers, disinfection cabinets and various industrial boxes
Remarks: Not limited by door panel thickness

特别说明:

- 材　　质: ZDC锌合金
- 表面处理: ZDC镀铬
- 结构功能: 外露式碰撞把手锁，通过螺丝固定安装，锁舌配置弹簧自动回弹，基座高度可调节
- 用　　途: 适用于冷库门、烤箱门、蒸箱、消毒柜及各种工业型箱体使用
- 备　　注: 不受门板厚度限制

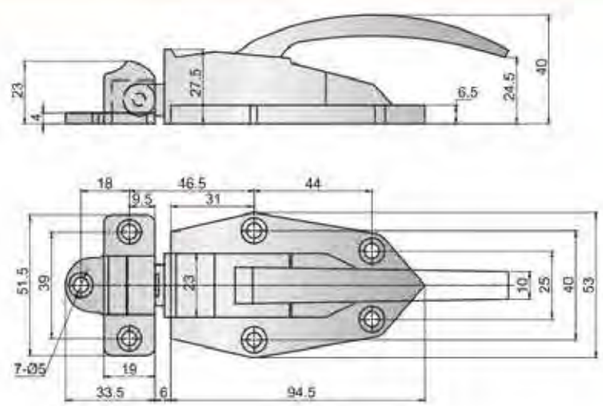

CT-1062

Feature Description:

Material: ZDC zinc alloy
Surface treatment: ZDC chrome plating
Structural function: exposed collision handle lock, fixed installation by screw, lock tongue configuration spring automatic rebound, base height adjustable
Uses: Suitable for cold storage doors, oven doors, steamers, disinfection cabinets and various industrial boxes
Remarks:Not limited by door panel thickness

特别说明:

- 材　　质: ZDC锌合金
- 表面处理: ZDC镀铬
- 结构功能: 外露式碰撞把手锁，通过螺丝固定安装，锁舌配置弹簧自动回弹，基座高度可调节
- 用　　途: 适用于冷库门、烤箱门、蒸箱、消毒柜及各种工业型箱体使用
- 备　　注: 不受门板厚度限制

把手锁 Handle lock
圆柱锁 Cylinder lock
平面锁 Plane lock
连杆锁 Rod control lock
面板锁 Panel lock
搭扣锁 Tonggle and hook
拉手 Handles
限位 Door stop
铰链 Hinge
冷库把手 Handle latch
磁吸 Magnet catch
附件 Accessories

地址：广东省肇庆市高要区金利镇都播工业区　电话：13929897256　邮箱：526202547@qq.com
Add: Dubo Industrial Zone, Jinli Town, Gaoyao District, Zhaoqing City, Guangdong Province　TEL: 13929897256　Email: 526202547@qq.com

把手锁 Handle lock
圆柱锁 Cylinder lock
平面锁 Plane lock
连杆锁 Rod control lock
面板锁 Panel lock
搭扣锁 Tonggle and hook
拉手 Handles
限位 Door stop
铰链 Hinge
冷库把手 Handle latch
磁吸 Magnet catch
附件 Accessories

CT-1063

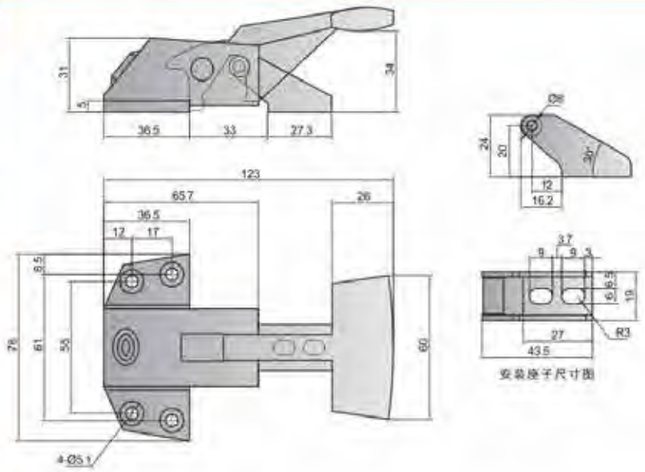

特别说明：

- 材　　质：ZDC锌合金
- 表面处理：ZDC镀铬
- 结构功能：外露式碰撞把手锁，通过螺丝固定安装，锁舌配置弹簧自动回弹，基座高度可调节
- 用　　途：适用于冷库门、烤箱门、蒸箱、消毒柜及各种工业型箱体使用
- 备　　注：不受门板厚度限制

Feature Description:

Material: ZDC zinc alloy
Surface treatment: ZDC chrome plating
Structural function: exposed collision handle lock, fixed installation by screw, lock tongue configuration spring automatic rebound, base height adjustable
Uses: Suitable for cold storage doors, oven doors, steamers, disinfection cabinets and various industrial boxes
Remarks: Not limited by door panel thickness

CT-1065

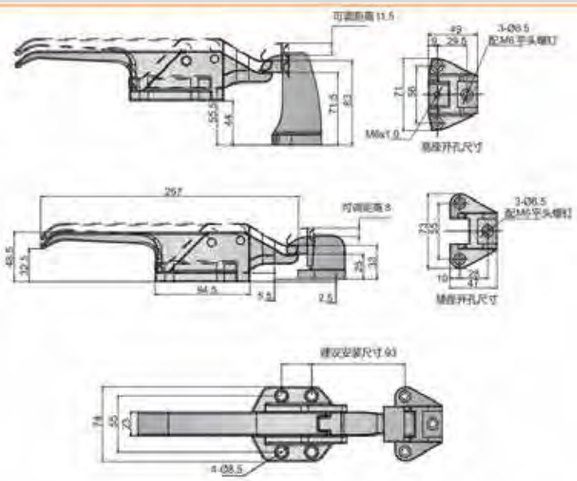

特别说明：

- 材　　质：ZDC锌合金
- 表面处理：ZDC镀铬
- 结构功能：外露式碰撞把手锁，通过螺丝固定安装，锁舌配置弹簧自动回弹，基座高度可调节
- 用　　途：适用于冷库门、烤箱门、蒸箱、消毒柜及各种工业型箱体使用
- 备　　注：不受门板厚度限制

Feature Description:

Material: ZDC zinc alloy
Surface treatment: ZDC chrome plating
Structural function: exposed collision handle lock, fixed installation by screw, lock tongue configuration spring automatic rebound, base height adjustable
Uses: Suitable for cold storage doors, oven doors, steamers, disinfection cabinets and various industrial boxes
Remarks: Not limited by door panel thickness

地址：广东省肇庆市高要区金利镇都播工业区　电话：13929897256　邮箱：526202547@qq.com
Add: Dubo Industrial Zone, Jinli Town, Gaoyao District, Zhaoqing City, Guangdong Province　TEL: 13929897256　Email: 526202547@qq.com

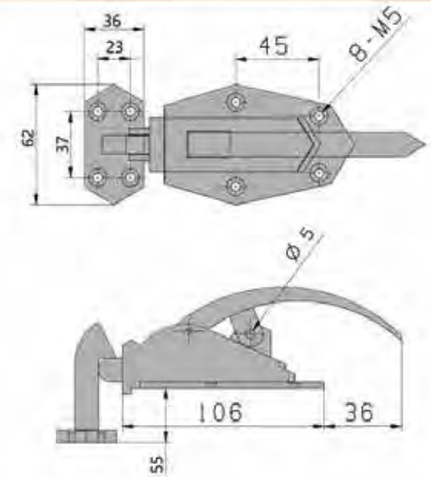

Feature Description:

Material: ZDC zinc alloy
Surface treatment: ZDC chrome plating
Structural function: exposed collision handle lock, fixed installation by screw, lock tongue configuration spring automatic rebound, base height adjustable
Uses: Suitable for cold storage doors, oven doors, steamers, disinfection cabinets and various industrial boxes
Remarks: Not limited by door panel thickness

CT-1067

特别说明：

- 材　　质：ZDC锌合金
- 表面处理：ZDC镀铬
- 结构功能：外露式碰撞把手锁，通过螺丝固定安装，锁舌配置弹簧自动回弹，基座高度可调节
- 用　　途：适用于冷库门、烤箱门、蒸箱、消毒柜及各种工业型箱体使用
- 备　　注：不受门板厚度限制

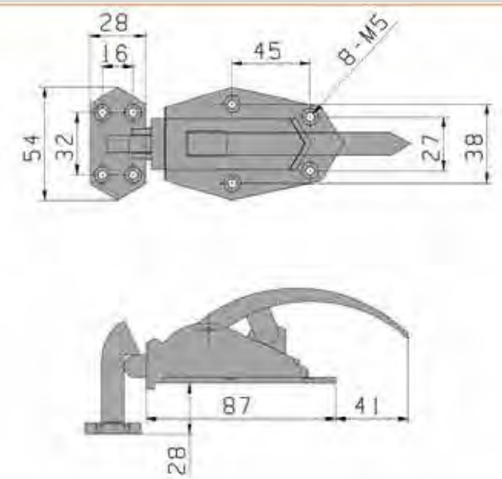

Feature Description:

Material: ZDC zinc alloy
Surface treatment: ZDC chrome plating
Structural function: exposed collision handle lock, fixed installation by screw, lock tongue configuration spring automatic rebound, base height adjustable
Uses: Suitable for cold storage doors, oven doors, steamers, disinfection cabinets and various industrial boxes
Remarks: Not limited by door panel thickness

CT-1068

特别说明：

- 材　　质：ZDC锌合金
- 表面处理：ZDC镀铬
- 结构功能：外露式碰撞把手锁，通过螺丝固定安装，锁舌配置弹簧自动回弹，基座高度可调节
- 用　　途：适用于冷库门、烤箱门、蒸箱、消毒柜及各种工业型箱体使用
- 备　　注：不受门板厚度限制

地址：广东省肇庆市高要区金利镇都播工业区　电话：13929897256　邮箱：526202547@qq.com
Add: Dubo Industrial Zone, Jinli Town, Gaoyao District, Zhaoqing City, Guangdong Province　TEL: 13929897256　Email: 526202547@qq.com

CT-1256

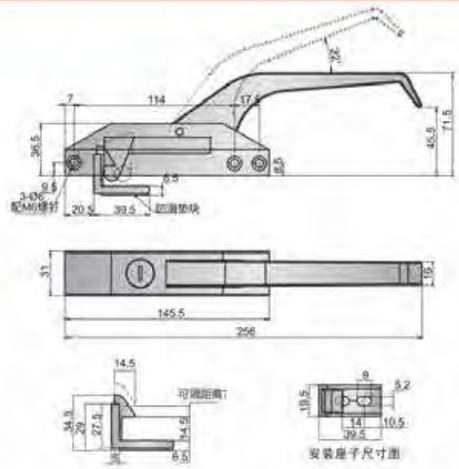

特别说明:

- 材　　质: ZDC锌合金
- 表面处理: ZDC镀铬
- 结构功能: 外露式碰撞把手锁，通过螺丝固定安装，锁舌配置弹簧自动回弹，基座高度可调节
- 用　　途: 适用于冷库门、烤箱门、蒸箱、消毒柜及各种工业型箱体使用
- 备　　注: 不受门板厚度限制

Feature Description:

Material: ZDC zinc alloy
Surface treatment: ZDC chrome plating
Structural function: exposed collision handle lock, fixed installation by screw, lock tongue configuration spring automatic rebound, base height adjustable
Uses: Suitable for cold storage doors, oven doors, steamers, disinfection cabinets and various industrial boxes
Remarks: Not limited by door panel thickness

CT-1230

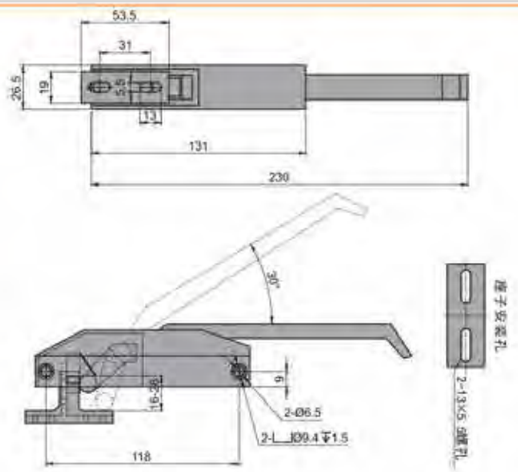

特别说明:

- 材　　质: ZDC锌合金
- 表面处理: ZDC镀铬
- 结构功能: 外露式碰撞把手锁，通过螺丝固定安装，锁舌配置弹簧自动回弹，基座高度可调节
- 用　　途: 适用于冷库门、烤箱门、蒸箱、消毒柜及各种工业型箱体使用
- 备　　注: 不受门板厚度限制

Feature Description:

Material: ZDC zinc alloy
Surface treatment: ZDC chrome plating
Structural function: exposed collision handle lock, fixed installation by screw, lock tongue configuration spring automatic rebound, base height adjustable
Uses: Suitable for cold storage doors, oven doors, steamers, disinfection cabinets and various industrial boxes
Remarks: Not limited by door panel thickness

地址：广东省肇庆市高要区金利镇都播工业区　电话：13929897256　邮箱：526202547@qq.com
Add: Dubo Industrial Zone, Jinli Town, Gaoyao District, Zhaoqing City, Guangdong Province　TEL: 13929897256　Email: 526202547@qq.com

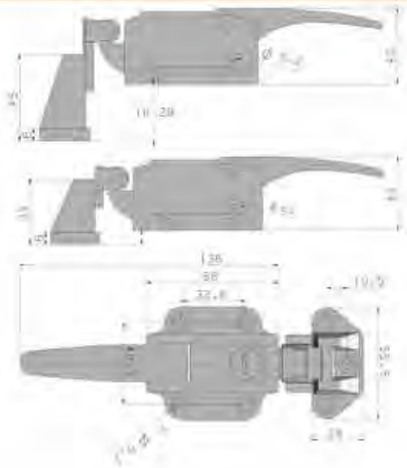

Feature Description:

Material: ZDC zinc alloy
Surface treatment: ZDC chrome plating
Structural function: exposed collision handle lock, fixed installation by screw, lock tongue configuration spring automatic rebound, base height adjustable
Uses: Suitable for cold storage doors, oven doors, steamers, disinfection cabinets and various industrial boxes
Remarks: Not limited by door panel thickness

CT-1360

特别说明:

- 材　　质: ZDC锌合金
- 表面处理: ZDC镀铬
- 结构功能: 外露式碰撞把手锁，通过螺丝固定安装，锁舌配置弹簧自动回弹，基座高度可调节
- 用　　途: 适用于冷库门、烤箱门、蒸箱、消毒柜及各种工业型箱体使用
- 备　　注: 不受门板厚度限制

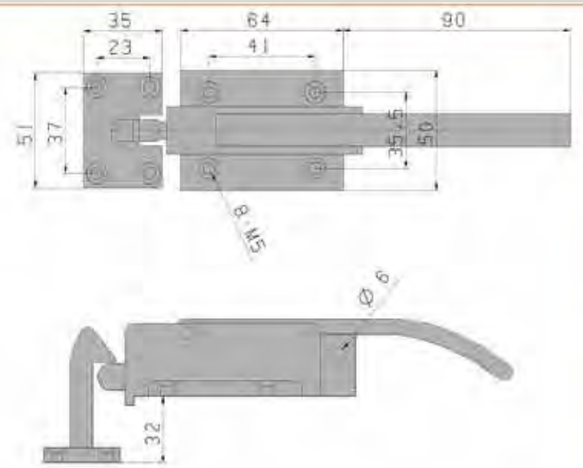

Feature Description:

Material: ZDC zinc alloy
Surface treatment: ZDC chrome plating
Structural function: exposed collision handle lock, fixed installation by screw, lock tongue configuration spring automatic rebound, base height adjustable
Uses: Suitable for cold storage doors, oven doors, steamers, disinfection cabinets and various industrial boxes
Remarks: Not limited by door panel thickness

CT-1064

特别说明:

- 材　　质: ZDC锌合金
- 表面处理: ZDC镀铬
- 结构功能: 外露式碰撞把手锁，通过螺丝固定安装，锁舌配置弹簧自动回弹，基座高度可调节
- 用　　途: 适用于冷库门、烤箱门、蒸箱、消毒柜及各种工业型箱体使用
- 备　　注: 不受门板厚度限制

把手锁 Handle lock
圆柱锁 Cylinder lock
平面锁 Plane lock
连杆锁 lock Rod control
面板锁 Panel lock
搭扣锁 hook Tonggle and
拉手 Handles
限位 Door stop
铰链 Hinge
冷库把手 Handle latch
磁吸 Magnet catch
附件 Accessories

地址：广东省肇庆市高要区金利镇都播工业区　电话：13929897256　邮箱：526202547@qq.com
Add: Dubo Industrial Zone, Jinli Town, Gaoyao District, Zhaoqing City, Guangdong Province　TEL: 13929897256　Email: 526202547@qq.com

CT-1630S

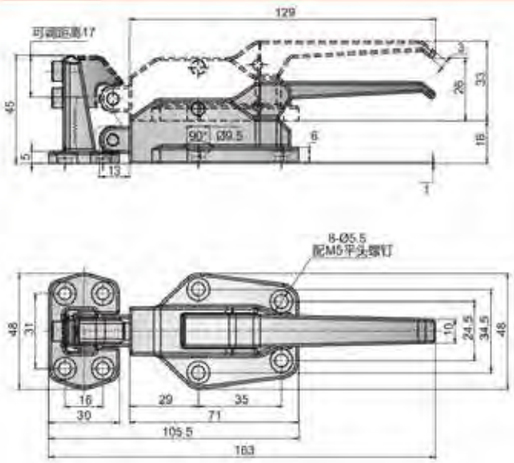

特别说明:

- 材　　质: ZDC锌合金
- 表面处理: ZDC镀铬
- 结构功能: 外露式碰撞把手锁，通过螺丝固定安装，锁舌配置弹簧自动回弹，基座高度可调节
- 用　　途: 适用于冷库门、烤箱门、蒸箱、消毒柜及各种工业型箱体使用
- 备　　注: 不受门板厚度限制

Feature Description:

Material: ZDC zinc alloy
Surface treatment: ZDC chrome plating
Structural function: exposed collision handle lock, fixed installation by screw, lock tongue configuration spring automatic rebound, base height adjustable
Uses: Suitable for cold storage doors, oven doors, steamers, disinfection cabinets and various industrial boxes
Remarks: Not limited by door panel thickness

CT-1868S

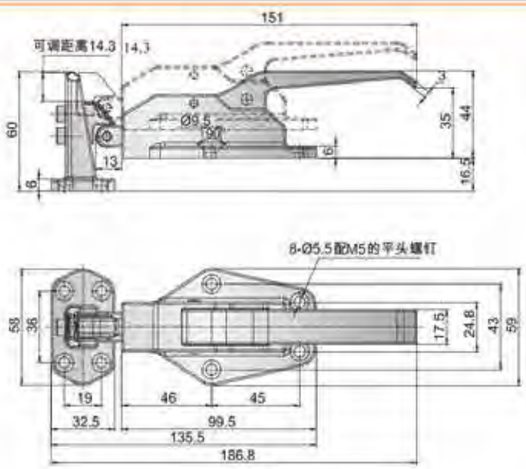

特别说明:

- 材　　质: SUS不锈钢
- 表面处理: 拉丝、镜面
- 结构功能: 外露式碰撞把手锁，通过螺丝固定安装，锁舌配置弹簧自动回弹，基座高度可调节
- 用　　途: 适用于冷库门、烤箱门、蒸箱、消毒柜及各种工业型箱体使用
- 备　　注: 不受门板厚度限制

Feature Description:

Material: ZDC zinc alloy
Surface treatment: ZDC chrome plating
Structural function: exposed collision handle lock, fixed installation by screw, lock tongue configuration spring automatic rebound, base height adjustable
Uses: Suitable for cold storage doors, oven doors, steamers, disinfection cabinets and various industrial boxes
Remarks: Not limited by door panel thickness

地址：广东省肇庆市高要区金利镇都播工业区　电话：13929897256　邮箱：526202547@qq.com
Add: Dubo Industrial Zone, Jinli Town, Gaoyao District, Zhaoqing City, Guangdong Province　TEL: 13929897256　Email: 526202547@qq.com

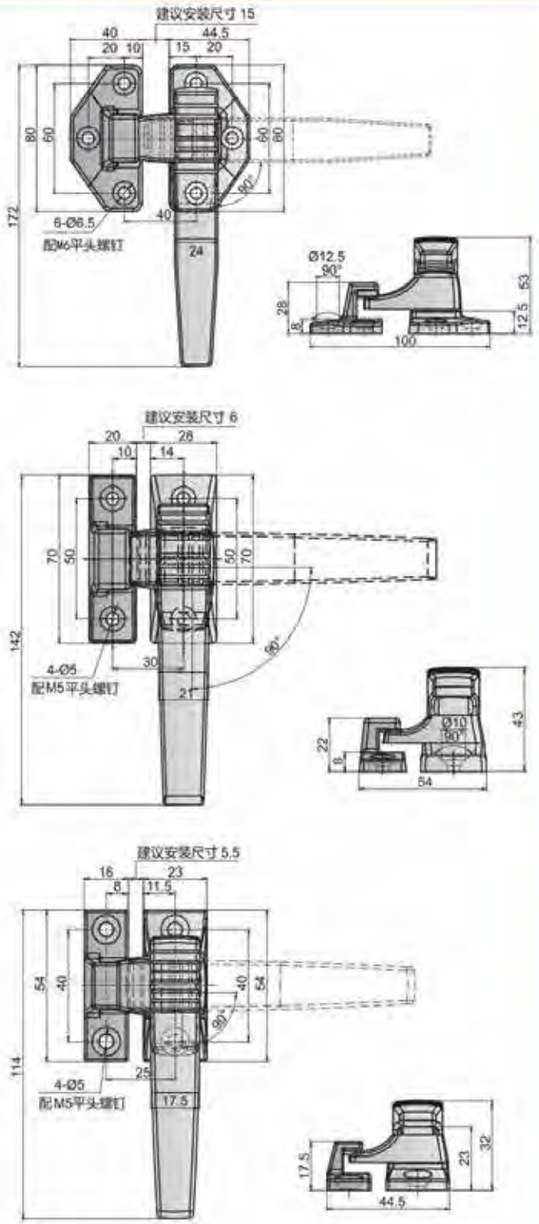

LS113-1

LS113-2

LS113-3

Feature Description:

Material: SUS stainless steel
Surface treatment: wire drawing, mirror
Structural function: surface-mounted urgent door handle, open or close by rotating the handle 90°, easy and convenient installation
Uses: suitable for ovens, steamers, constant temperature test chambers, machinery, ships, kitchens, environmental equipment, medical equipment, etc
Remarks: Not limited by door panel thickness

特别说明:

- 材　　质: SUS不锈钢
- 表面处理: 拉丝、镜面
- 结构功能: 明装式紧迫门把手，通过把手旋转90°开启或关闭，安装简易方便
- 用　　途: 适用于烤箱、蒸箱、恒温试验箱、机械设、船舶、厨房、环境设备、医疗设备等
- 备　　注: 不受门板厚度限制

地址：广东省肇庆市高要区金利镇都播工业区　电话：13929897256　邮箱：526202547@qq.com
Add: Dubo Industrial Zone, Jinli Town, Gaoyao District, Zhaoqing City, Guangdong Province　TEL: 13929897256　Email: 526202547@qq.com

LS114-4/Z/Y

LS114-3/Z/Y

LS114-2/Z/Y

LS114-1/Z/Y

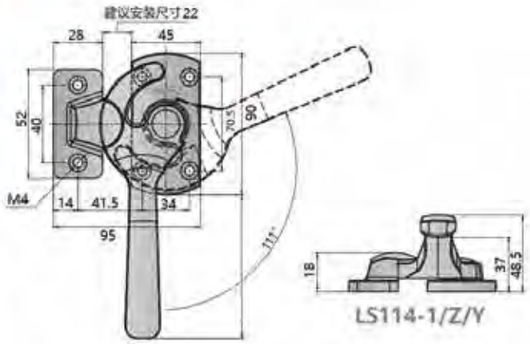

LS114-1/Z/Y

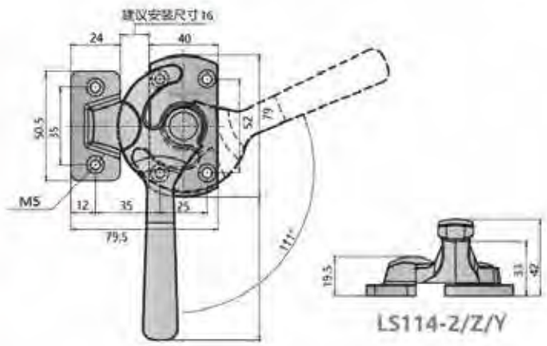

LS114-2/Z/Y

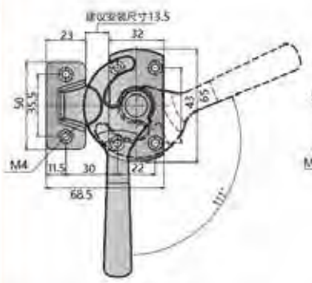

LS114-3/Z/Y

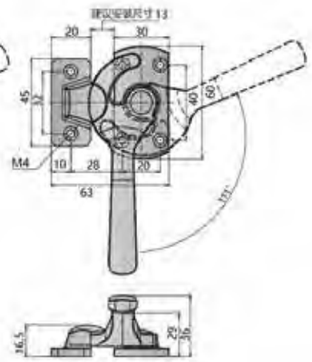

LS114-4/Z/Y

特别说明:

- 材　　质: SUS不锈钢
- 表面处理: 拉丝、镜面
- 结构功能: 明装式紧迫门把手，通过把手旋转110°开启或关闭，安装简易方便
- 用　　途: 适用于烤箱、蒸箱、恒温试验箱、机械设、船舶、厨房、环境设备、医疗设备等
- 备　　注: 不受门板厚度限制

Feature Description:

Material: SUS stainless steel
Surface treatment: wire drawing, mirror
Structural function: surface-mounted urgent door handle, open or close by rotating the handle 110°, easy and convenient installation
Uses: suitable for ovens, steamers, constant temperature test chambers, machinery, ships, kitchens, environmental equipment, medical equipment, etc
Remarks: Not limited by door panel thickness

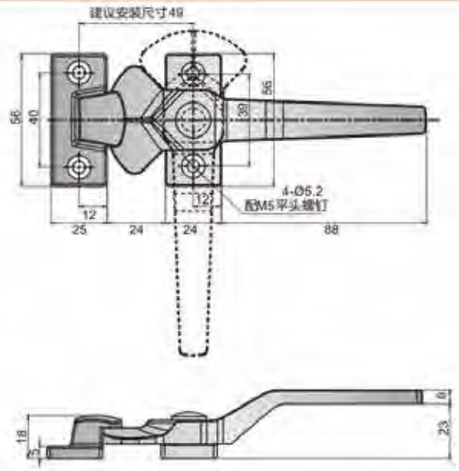

LS115-1

特别说明:

- 材　　质: SUS不锈钢
- 表面处理: 拉丝、镜面
- 结构功能: 明装式紧迫门把手，通过把手旋转110°开启或关闭，安装简易方便
- 用　　途: 适用于烤箱、蒸箱、恒温试验箱、机械设、船舶、厨房、环境设备、医疗设备等
- 备　　注: 不受门板厚度限制

Feature Description:

Material: SUS stainless steel
Surface treatment: wire drawing, mirror
Structural function: surface-mounted urgent door handle, open or close by rotating the handle 110°, easy and convenient installation
Uses: suitable for ovens, steamers, constant temperature test chambers, machinery, ships, kitchens, environmental equipment, medical equipment, etc
Remarks: Not limited by door panel thickness

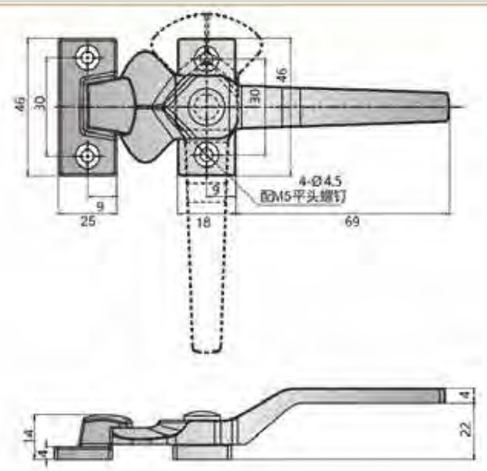

LS115-2

特别说明:

- 材　　质: SUS不锈钢
- 表面处理: 拉丝、镜面
- 结构功能: 明装式紧迫门把手，通过把手旋转110°开启或关闭，安装简易方便
- 用　　途: 适用于烤箱、蒸箱、恒温试验箱、机械设、船舶、厨房、环境设备、医疗设备等
- 备　　注: 不受门板厚度限制

Feature Description:

Material: SUS stainless steel
Surface treatment: wire drawing, mirror
Structural function: surface-mounted urgent door handle, open or close by rotating the handle 110°, easy and convenient installation
Uses: suitable for ovens, steamers, constant temperature test chambers, machinery, ships, kitchens, environmental equipment, medical equipment, etc
Remarks: Not limited by door panel thickness

CT-1200

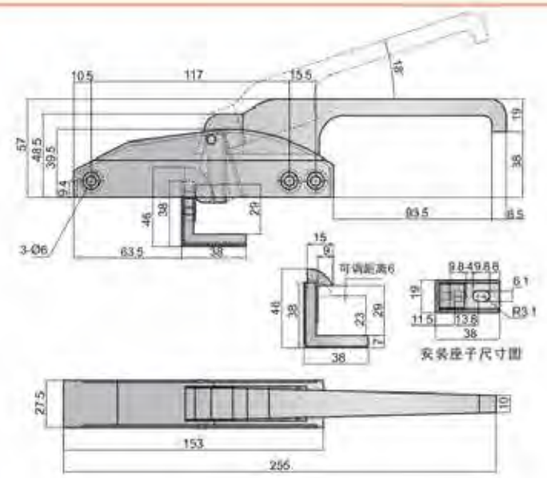

特别说明：

- 材　　质：ZDC锌合金/SUS不锈钢
- 表面处理：ZDC镀铬，SUS拉丝，镜面
- 结构功能：外露式碰撞把手锁，通过螺丝固定安装，锁舌配置弹簧自动回弹，基座高度可调节
- 用　　途：适用于冷库门、烤箱门、蒸箱、消毒柜及各种工业型箱体使用
- 备　　注：不受门板厚度限制

Feature Description:

Material: ZDC zinc alloy/SUS stainless steel
Surface treatment: ZDC chrome plating, SUS wire drawing, mirror surface
Structural function: exposed collision handle lock, fixed installation by screw, lock tongue configuration spring automatic rebound, base height adjustable
Uses: Suitable for cold storage doors, oven doors, steamers, disinfection cabinets and various industrial boxes
Remarks: Not limited by door panel thickness

CT-1250

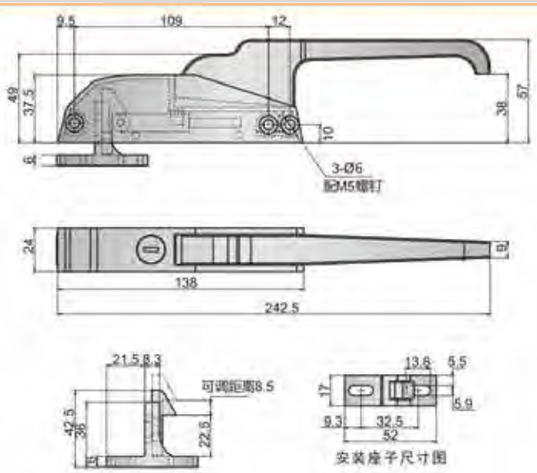

特别说明：

- 材　　质：ZDC锌合金/SUS不锈钢
- 表面处理：ZDC镀铬，SUS拉丝，镜面
- 结构功能：外露式碰撞把手锁，通过螺丝固定安装，锁舌配置弹簧自动回弹，基座高度可调节
- 用　　途：适用于冷库门、烤箱门、蒸箱、消毒柜及各种工业型箱体使用
- 备　　注：不受门板厚度限制

Feature Description:

Material: ZDC zinc alloy/SUS stainless steel
Surface treatment: ZDC chrome plating, SUS wire drawing, mirror surface
Structural function: exposed collision handle lock, fixed installation by screw, lock tongue configuration spring automatic rebound, base height adjustable
Uses: Suitable for cold storage doors, oven doors, steamers, disinfection cabinets and various industrial boxes
Remarks: Not limited by door panel thickness

地址：广东省肇庆市高要区金利镇都播工业区　电话：13929897256　邮箱：526202547@qq.com
Add: Dubo Industrial Zone, Jinli Town, Gaoyao District, Zhaoqing City, Guangdong Province　TEL: 13929897256　Email: 526202547@qq.com

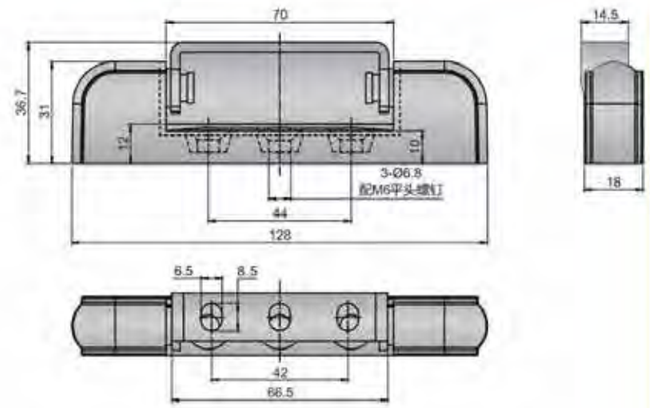

HCT-1331

Feature Description:

Material: ZDC zinc alloy/SUS stainless steel
Surface treatment: ZDC chrome plating, SUS wire drawing, mirror surface
Structural function: exposed exposed hinge, fixed by screws, easy to install and disassemble
Uses: Suitable for cold storage doors, oven doors, steamers, disinfection cabinets and various industrial boxes
Remarks: Not limited by door panel thickness

特别说明：

- 材　　质：ZDC锌合金/SUS不锈钢
- 表面处理：ZDC镀铬，SUS拉丝，镜面
- 结构功能：外露式明装铰链，通过螺丝固定，安装拆卸简易方便
- 用　　途：适用于冷库门、烤箱门、蒸箱、消毒柜及各种工业型箱体使用
- 备　　注：不受门板厚度限制

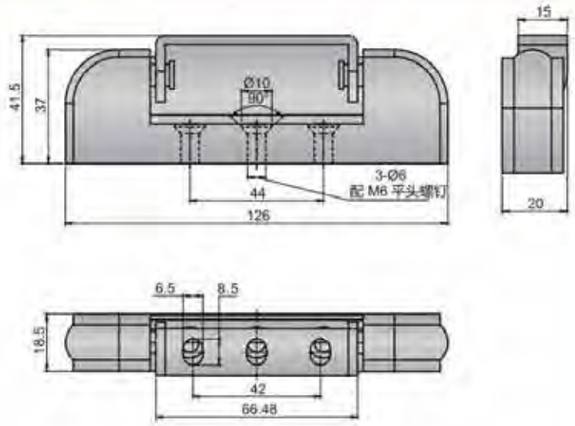

HCT-1336

Feature Description:

Material: ZDC zinc alloy/SUS stainless steel
Surface treatment: ZDC chrome plating, SUS wire drawing, mirror surface
Structural function: exposed exposed hinge, fixed by screws, easy to install and disassemble
Uses: Suitable for cold storage doors, oven doors, steamers, disinfection cabinets and various industrial boxes
Remarks: Not limited by door panel thickness

特别说明：

- 材　　质：ZDC锌合金/SUS不锈钢
- 表面处理：ZDC镀铬，SUS拉丝，镜面
- 结构功能：外露式明装铰链，通过螺丝固定，安装拆卸简易方便
- 用　　途：适用于冷库门、烤箱门、蒸箱、消毒柜及各种工业型箱体使用
- 备　　注：不受门板厚度限制

地址：广东省肇庆市高要区金利镇都播工业区　电话：13929897256　邮箱：526202547@qq.com
Add: Dubo Industrial Zone, Jinli Town, Gaoyao District, Zhaoqing City, Guangdong Province　TEL: 13929897256　Email: 526202547@qq.com

把手锁 Handle lock
圆柱锁 Cylinder lock
平面锁 Plane lock
连杆锁 Rod control lock
面板锁 Panel lock
搭扣锁 Tonggle and hook
拉手 Handles
限位 Door stop
铰链 Hinge
冷库把手 Handle latch
磁吸 Magnet catch
附件 Accessories

HCT-1800

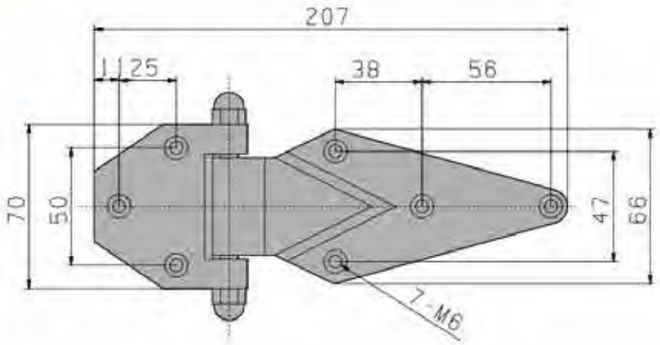

特别说明:

- 材　　质: ZDC锌合金/SUS不锈钢
- 表面处理: ZDC镀铬、SUS拉丝、镜面
- 结构功能: 外露式明装铰链，通过螺丝固定，安装拆卸简易方便
- 用　　途: 适用于冷库门、烤箱门、蒸箱、消毒柜及各种工业型箱体使用
- 备　　注: 不受门板厚度限制

Feature Description:

Material: ZDC zinc alloy/SUS stainless steel
Surface treatment: ZDC chrome plating, SUS wire drawing, mirror surface
Structural function: exposed exposed hinge, fixed by screws, easy to install and disassemble
Uses: Suitable for cold storage doors, oven doors, steamers, disinfection cabinets and various industrial boxes
Remarks: Not limited by door panel thickness

HCT-1432

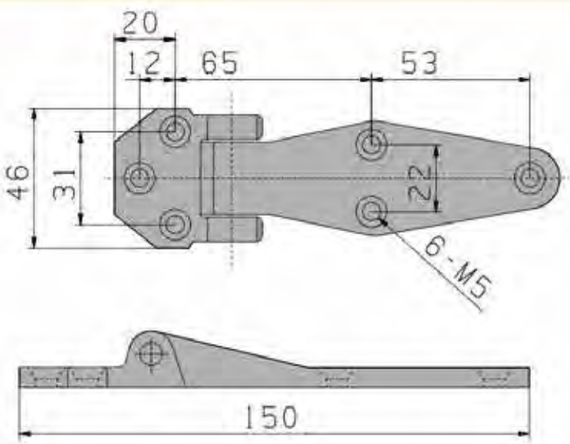

特别说明:

- 材　　质: ZDC锌合金/SUS不锈钢
- 表面处理: ZDC镀铬、SUS拉丝、镜面
- 结构功能: 外露式明装铰链，通过螺丝固定，安装拆卸简易方便
- 用　　途: 适用于冷库门、烤箱门、蒸箱、消毒柜及各种工业型箱体使用
- 备　　注: 不受门板厚度限制

Feature Description:

Material: ZDC zinc alloy/SUS stainless steel
Surface treatment: ZDC chrome plating, SUS wire drawing, mirror surface
Structural function: exposed exposed hinge, fixed by screws, easy to install and disassemble
Uses: Suitable for cold storage doors, oven doors, steamers, disinfection cabinets and various industrial boxes
Remarks: Not limited by door panel thickness

地址：广东省肇庆市高要区金利镇都播工业区　电话：13929897256　邮箱：526202547@qq.com
Add: Dubo Industrial Zone, Jinli Town, Gaoyao District, Zhaoqing City, Guangdong Province　TEL: 13929897256　Email: 526202547@qq.com

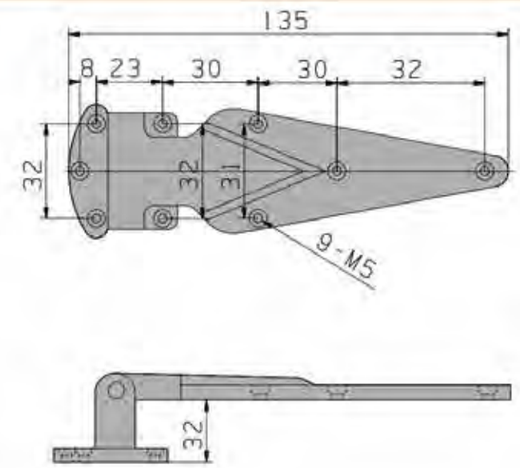

Feature Description:

Material: ZDC zinc alloy/SUS stainless steel
Surface treatment: ZDC chrome plating, SUS wire drawing, mirror surface
Structural function: exposed exposed hinge, fixed by screws, easy to install and disassemble
Uses: Suitable for cold storage doors, oven doors, steamers, disinfection cabinets and various industrial boxes
Remarks: Not limited by door panel thickness

HCT-1532

特别说明:

- 材　　质: ZDC锌合金/SUS不锈钢
- 表面处理: ZDC镀铬、SUS拉丝、镜面
- 结构功能: 外露式明装铰链，通过螺丝固定，安装拆卸简易方便
- 用　　途: 适用于冷库门、烤箱门、蒸箱、消毒柜及各种工业型箱体使用
- 备　　注: 不受门板厚度限制

Feature Description:

Material: ZDC zinc alloy/SUS stainless steel
Surface treatment: ZDC chrome plating, SUS wire drawing, mirror surface
Structural function: exposed exposed hinge, fixed by screws, easy to install and disassemble
Uses: Suitable for cold storage doors, oven doors, steamers, disinfection cabinets and various industrial boxes
Remarks: Not limited by door panel thickness

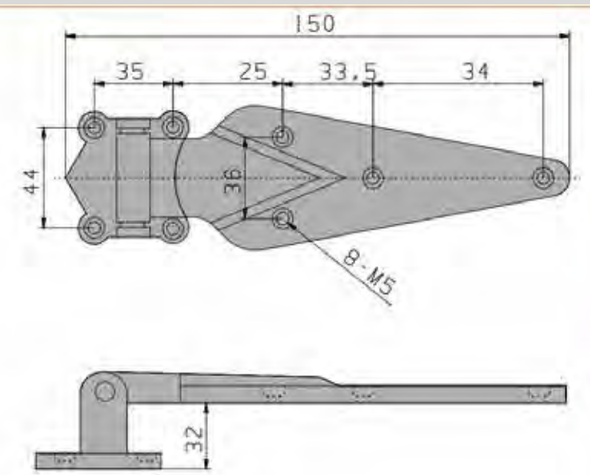

HCT-1632

特别说明:

- 材　　质: ZDC锌合金/SUS不锈钢
- 表面处理: ZDC镀铬、SUS拉丝、镜面
- 结构功能: 外露式明装铰链，通过螺丝固定，安装拆卸简易方便
- 用　　途: 适用于冷库门、烤箱门、蒸箱、消毒柜及各种工业型箱体使用
- 备　　注: 不受门板厚度限制

Feature Description:

Material: ZDC zinc alloy/SUS stainless steel
Surface treatment: ZDC chrome plating, SUS wire drawing, mirror surface
Structural function: exposed exposed hinge, fixed by screws, easy to install and disassemble
Uses: Suitable for cold storage doors, oven doors, steamers, disinfection cabinets and various industrial boxes
Remarks: Not limited by door panel thickness

地址：广东省肇庆市高要区金利镇都播工业区　电话：13929897256　邮箱：526202547@qq.com
Add: Dubo Industrial Zone, Jinli Town, Gaoyao District, Zhaoqing City, Guangdong Province　TEL: 13929897256　Email: 526202547@qq.com

HCT-1832

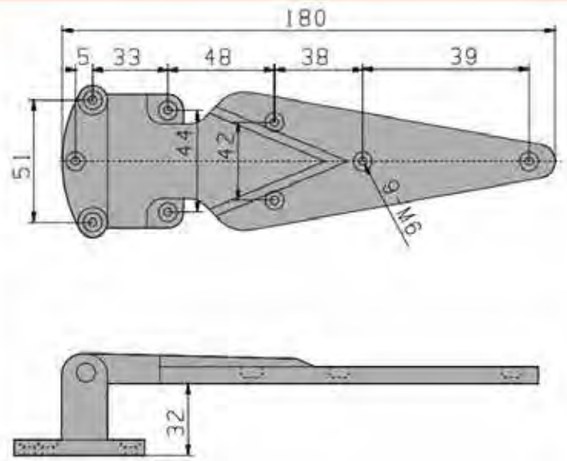

特别说明:

- 材　　质: ZDC锌合金/SUS不锈钢
- 表面处理: ZDC镀铬、SUS拉丝、镜面
- 结构功能: 外露式明装铰链，通过螺丝固定，安装拆卸简易方便
- 用　　途: 适用于冷库门、烤箱门、蒸箱、消毒柜及各种工业型箱体使用
- 备　　注: 不受门板厚度限制

Feature Description:

Material: ZDC zinc alloy/SUS stainless steel
Surface treatment: ZDC chrome plating, SUS wire drawing, mirror surface
Structural function: exposed exposed hinge, fixed by screws, easy to install and disassemble
Uses: Suitable for cold storage doors, oven doors, steamers, disinfection cabinets and various industrial boxes
Remarks: Not limited by door panel thickness

HCT-1460

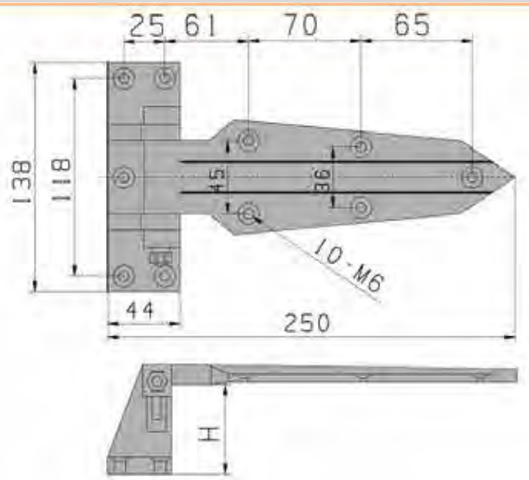

特别说明:

- 材　　质: ZDC锌合金/SUS不锈钢
- 表面处理: ZDC镀铬、SUS拉丝、镜面
- 结构功能: 外露式明装铰链，通过螺丝固定，安装拆卸简易方便
- 用　　途: 适用于冷库门、烤箱门、蒸箱、消毒柜及各种工业型箱体使用
- 备　　注: 不受门板厚度限制

Feature Description:

Material: ZDC zinc alloy/SUS stainless steel
Surface treatment: ZDC chrome plating, SUS wire drawing, mirror surface
Structural function: exposed exposed hinge, fixed by screws, easy to install and disassemble
Uses: Suitable for cold storage doors, oven doors, steamers, disinfection cabinets and various industrial boxes
Remarks: Not limited by door panel thickness

地址：广东省肇庆市高要区金利镇都播工业区　电话：13929897256　邮箱：526202547@qq.com
Add: Dubo Industrial Zone, Jinli Town, Gaoyao District, Zhaoqing City, Guangdong Province　TEL: 13929897256　Email: 526202547@qq.com

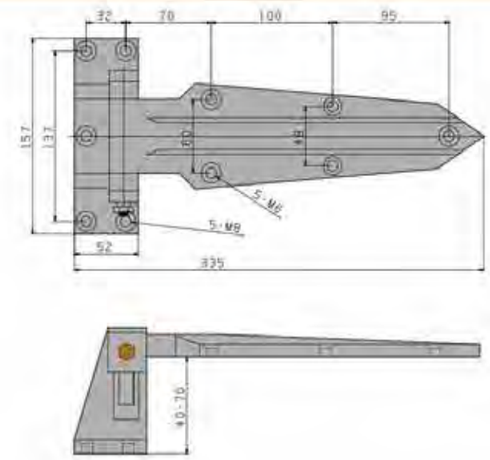

Feature Description:

Material: ZDC zinc alloy/SUS stainless steel
Surface treatment: ZDC chrome plating, SUS wire drawing, mirror surface
Structural function: exposed exposed hinge, fixed by screws, easy to install and disassemble
Uses: Suitable for cold storage doors, oven doors, steamers, disinfection cabinets and various industrial boxes
Remarks: Not limited by door panel thickness

HCT-1570

特别说明:

- 材　　质: ZDC锌合金/SUS不锈钢
- 表面处理: ZDC镀铬、SUS拉丝、镜面
- 结构功能: 外露式明装铰链，通过螺丝固定，安装拆卸简易方便
- 用　　途: 适用于冷库门、烤箱门、蒸箱、消毒柜及各种工业型箱体使用
- 备　　注: 不受门板厚度限制

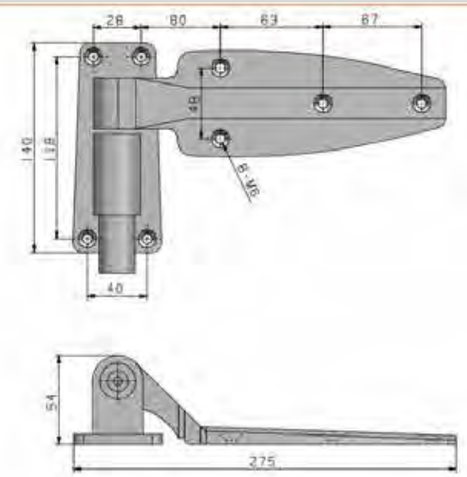

Feature Description:

Material: ZDC zinc alloy/SUS stainless steel
Surface treatment: ZDC chrome plating, SUS wire drawing, mirror surface
Structural function: exposed exposed hinge, fixed by screws, easy to install and disassemble
Uses: Suitable for cold storage doors, oven doors, steamers, disinfection cabinets and various industrial boxes
Remarks: Not limited by door panel thickness

HCT-1230

特别说明:

- 材　　质: ZDC锌合金/SUS不锈钢
- 表面处理: ZDC镀铬、SUS拉丝、镜面
- 结构功能: 外露式明装铰链，通过螺丝固定，安装拆卸简易方便
- 用　　途: 适用于冷库门、烤箱门、蒸箱、消毒柜及各种工业型箱体使用
- 备　　注: 不受门板厚度限制

地址：广东省肇庆市高要区金利镇都播工业区　电话：13929897256　邮箱：526202547@qq.com
Add: Dubo Industrial Zone, Jinli Town, Gaoyao District, Zhaoqing City, Guangdong Province　TEL: 13929897256　Email: 526202547@qq.com

HCT-1238

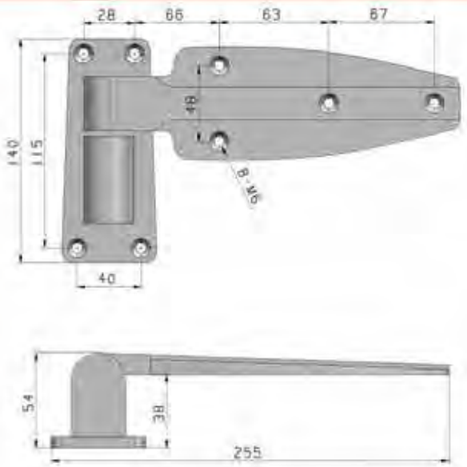

特别说明:

- 材　　质: ZDC锌合金/SUS不锈钢
- 表面处理: ZDC镀铬、SUS拉丝、镜面
- 结构功能: 外露式明装铰链，通过螺丝固定，安装拆卸简易方便
- 用　　途: 适用于冷库门、烤箱门、蒸箱、消毒柜及各种工业型箱体使用
- 备　　注: 不受门板厚度限制

Feature Description:

Material: ZDC zinc alloy/SUS stainless steel
Surface treatment: ZDC chrome plating, SUS wire drawing, mirror surface
Structural function: exposed exposed hinge, fixed by screws, easy to install and disassemble
Uses: Suitable for cold storage doors, oven doors, steamers, disinfection cabinets and various industrial boxes
Remarks: Not limited by door panel thickness

HCT-1239

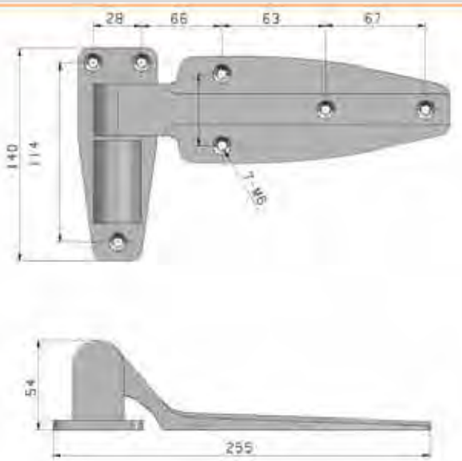

特别说明:

- 材　　质: ZDC锌合金/SUS不锈钢
- 表面处理: ZDC镀铬、SUS拉丝、镜面
- 结构功能: 外露式明装铰链，通过螺丝固定，安装拆卸简易方便
- 用　　途: 适用于冷库门、烤箱门、蒸箱、消毒柜及各种工业型箱体使用
- 备　　注: 不受门板厚度限制

Feature Description:

Material: ZDC zinc alloy/SUS stainless steel
Surface treatment: ZDC chrome plating, SUS wire drawing, mirror surface
Structural function: exposed exposed hinge, fixed by screws, easy to install and disassemble
Uses: Suitable for cold storage doors, oven doors, steamers, disinfection cabinets and various industrial boxes
Remarks: Not limited by door panel thickness

地址：广东省肇庆市高要区金利镇都播工业区　电话：13929897256　邮箱：526202547@qq.com
Add: Dubo Industrial Zone, Jinli Town, Gaoyao District, Zhaoqing City, Guangdong Province　TEL: 13929897256　Email: 526202547@qq.com

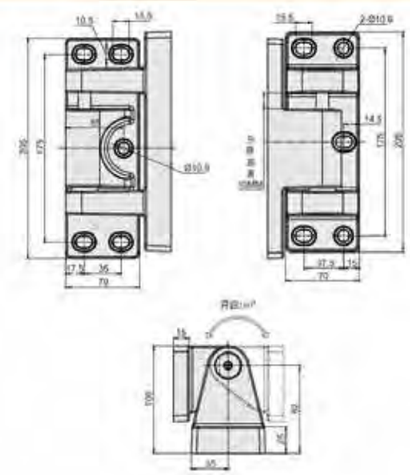

HCT-2051

Feature Description:

Material: SUS stainless steel
Surface treatment: ZDC chrome plating, SUS wire drawing, mirror surface
Structural function: exposed exposed hinge, fixed by screws, easy to install and disassemble
Uses: Suitable for cold storage doors, oven doors, steamers, disinfection cabinets and various industrial boxes
Remarks: Not limited by door panel thickness

特别说明:

- 材　　质: SUS不锈钢
- 表面处理: SUS拉丝、镜面
- 结构功能: 外露式明装铰链，通过螺丝固定，安装拆卸简易方便
- 用　　途: 适用于冷库门、烤箱门、蒸箱、消毒柜及各种工业型箱体使用
- 备　　注: 不受门板厚度限制

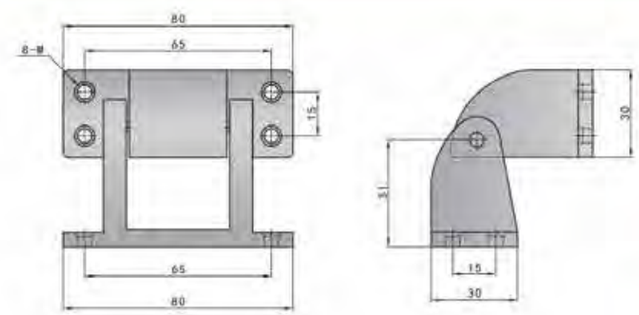

Feature Description:

Material: ZDC zinc alloy/SUS stainless steel
Surface treatment: ZDC chrome plating, SUS wire drawing, mirror surface
Structural function: exposed exposed hinge, fixed by screws, easy to install and disassemble
Uses: Suitable for cold storage doors, oven doors, steamers, disinfection cabinets and various industrial boxes
Remarks: Not limited by door panel thickness

特别说明:

- 材　　质: ZDC锌合金/SUS不锈钢
- 表面处理: ZDC镀铬、SUS拉丝、镜面
- 结构功能: 外露式明装铰链，通过螺丝固定，安装拆卸简易方便
- 用　　途: 适用于冷库门、烤箱门、蒸箱、消毒柜及各种工业型箱体使用
- 备　　注: 不受门板厚度限制

地址：广东省肇庆市高要区金利镇都播工业区　电话：13929897256　邮箱：526202547@qq.com
Add: Dubo Industrial Zone, Jinli Town, Gaoyao District, Zhaoqing City, Guangdong Province　TEL: 13929897256　Email: 526202547@qq.com

CLK01-1Z
ZDC锌合金

CLK01-1S
SUS不锈钢

CLK01-2Z
ZDC锌合金

CLK01-2S
SUS不锈钢

CLK01-3Z
ZDC锌合金

CLK01-3S
SUS不锈钢

CLK01-4Z
ZDC锌合金

CLK01-4S
SUS不锈钢

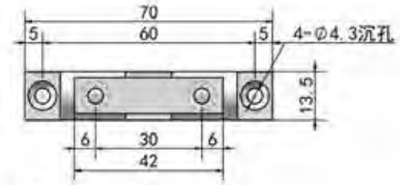

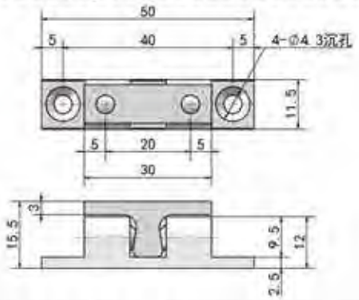

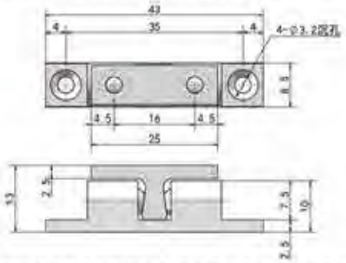

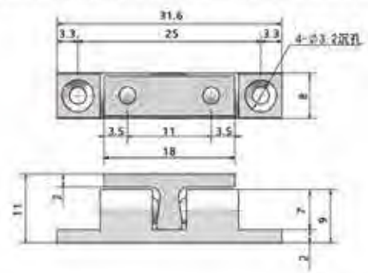

特征说明:

- 材　　质: ZDC、SUS、不锈钢弹珠、弹簧
- 表面处理: ZDC镀铬、SUS拉丝、镜面
- 结构功能: 明装可调式碰珠，通过两边螺柱调节开启关闭大小力度
- 用　　途: 一般适用于橱柜、衣柜、电柜、电箱、自动化设备钣金柜门
- 备　　注: 不受门板厚度限制

Feature Description:

Material: ZDC, SUS, stainless steel marbles, springs
Surface treatment: ZDC chrome plating, SUS wire drawing, mirror surface
Structural function: exposed adjustable touching bead, adjust the opening and closing force through the studs on both sides
Uses: generally suitable for cabinets, wardrobes, electric cabinets, electrical boxes, automation equipment sheet metal cabinet doors
Remarks: Not limited by door panel thickness

地址：广东省肇庆市高要区金利镇都播工业区　电话：13929897256　邮箱：526202547@qq.com
Add: Dubo Industrial Zone, Jinli Town, Gaoyao District, Zhaoqing City, Guangdong Province　TEL: 13929897256　Email: 526202547@qq.com

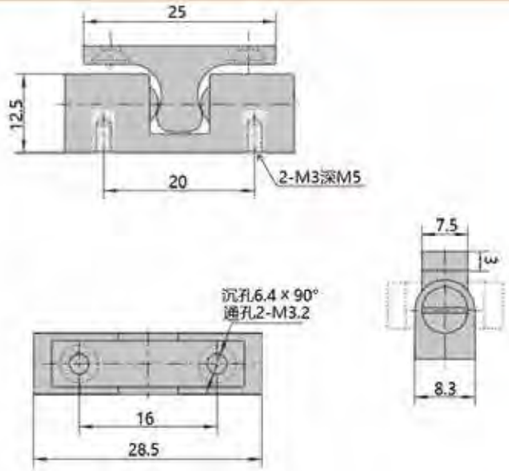

CLK02-1Z

Feature Description:

Material: ZDC, stainless steel marbles, springs
Surface treatment: ZDC chrome plating
Structural function: exposed adjustable touching bead, adjust the opening and closing force through the studs on both sides
Uses: generally suitable for cabinets, wardrobes, electric cabinets, electrical boxes, automation equipment sheet metal cabinet doors
Remarks: Not limited by door panel thickness

特征说明:

- 材　　质: ZDC、不锈钢弹珠、弹簧
- 表面处理: ZDC镀铬
- 结构功能: 明装可调式碰珠，通过两边螺柱调节开启关闭大小力度
- 用　　途: 一般适用于橱柜、衣柜、电柜、电箱、自动化设备钣金柜门
- 备　　注: 不受门板厚度限制

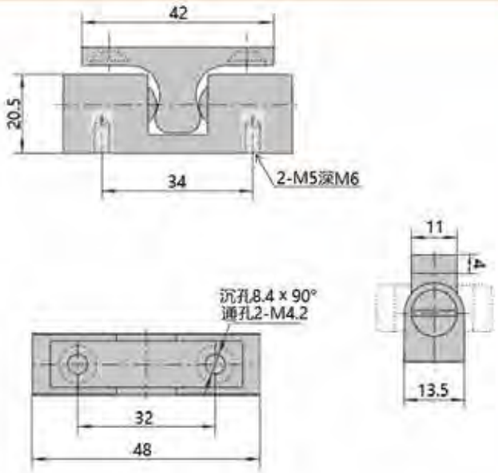

CLK02-2Z

Feature Description:

Material: ZDC, stainless steel marbles, springs
Surface treatment: ZDC chrome plating
Structural function: exposed adjustable touching bead, adjust the opening and closing force through the studs on both sides
Uses: generally suitable for cabinets, wardrobes, electric cabinets, electrical boxes, automation equipment sheet metal cabinet doors
Remarks: Not limited by door panel thickness

特征说明:

- 材　　质: ZDC、不锈钢弹珠、弹簧
- 表面处理: ZDC镀铬
- 结构功能: 明装可调式碰珠，通过两边螺柱调节开启关闭大小力度
- 用　　途: 一般适用于橱柜、衣柜、电柜、电箱、自动化设备钣金柜门
- 备　　注: 不受门板厚度限制

地址：广东省肇庆市高要区金利镇都播工业区　电话：13929897256　邮箱：526202547@qq.com
Add: Dubo Industrial Zone, Jinli Town, Gaoyao District, Zhaoqing City, Guangdong Province　TEL: 13929897256　Email: 526202547@qq.com

CLK21-1Z

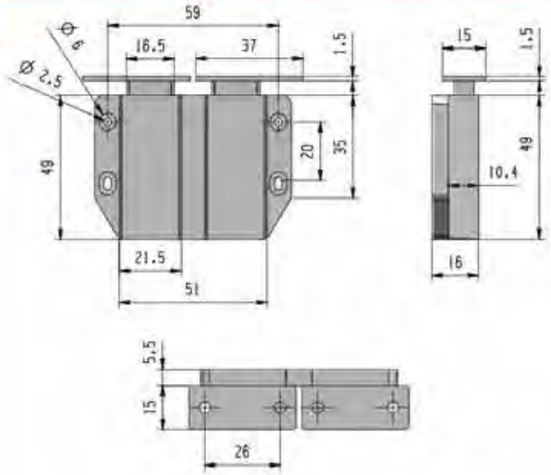

特征说明:

- 材　　质: ZDC锌合金，强力磁吸
- 表面处理: 镜面、拉丝
- 结构功能: 外定位安装强力磁吸，通过磁铁于钢片链 接产生磁力吸合关闭
- 用　　途: 一般适用于柜柜、衣柜、电柜、电箱、自动化设备钣金柜门
- 备　　注: 不受门板厚度限制

Feature Description:

Material: ZDC zinc alloy, strong magnetic
Surface treatment: mirror, brushed
Structural function: strong magnetic attraction is installed in external positioning, and magnetic attraction is closed by the magnet in the steel sheet link
Uses: generally suitable for cabinets, wardrobes, electric cabinets, electrical boxes, automation equipment sheet metal cabinet doors
Remarks: Not limited by door panel thickness

CLK21-2Z

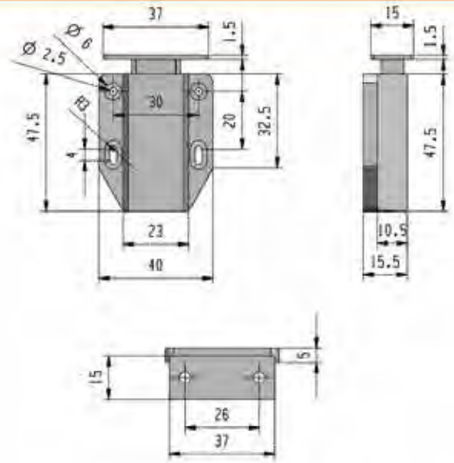

特征说明:

- 材　　质: ZDC锌合金，强力磁吸
- 表面处理: 镜面、拉丝
- 结构功能: 外定位安装强力磁吸，通过磁铁于钢片链 接产生磁力吸合关闭
- 用　　途: 一般适用于柜柜、衣柜、电柜、电箱、自动化设备钣金柜门
- 备　　注: 不受门板厚度限制

Feature Description:

Material: ZDC zinc alloy, strong magnetic
Surface treatment: mirror, brushed
Structural function: strong magnetic attraction is installed in external positioning, and magnetic attraction is closed by the magnet in the steel sheet link
Uses: generally suitable for cabinets, wardrobes, electric cabinets, electrical boxes, automation equipment sheet metal cabinet doors
Remarks: Not limited by door panel thickness

地址：广东省肇庆市高要区金利镇都播工业区　电话：13929897256　邮箱：526202547@qq.com
Add: Dubo Industrial Zone, Jinli Town, Gaoyao District, Zhaoqing City, Guangdong Province　TEL: 13929897256　Email: 526202547@qq.com

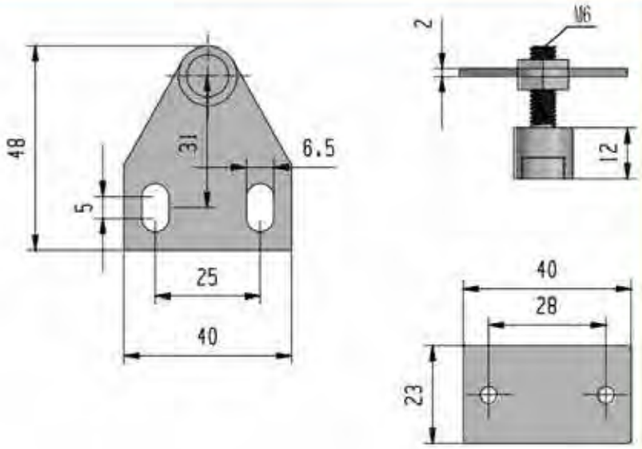

CLK22-1

Feature Description:

Material: SPCC positioning plate, screw, screw
Surface treatment: nickel plating
Structural function: strong magnetic attraction is installed in external positioning, and magnetic attraction is closed by the magnet in the steel sheet link
Uses: generally suitable for cabinets, wardrobes, electric cabinets, electrical boxes, automation equipment sheet metal cabinet doors
Remarks: Not limited by door panel thickness

特征说明:

- 材　　质: SPCC定位板、螺杆、螺丝
- 表面处理: 镀镍
- 结构功能: 外定位安装强力磁吸，通过磁铁于钢片链 接产生磁力吸合关闭
- 用　　途: 一般适用于柜柜、衣柜、电柜、电箱、自动化设备钣金柜门
- 备　　注: 不受门板厚度限制

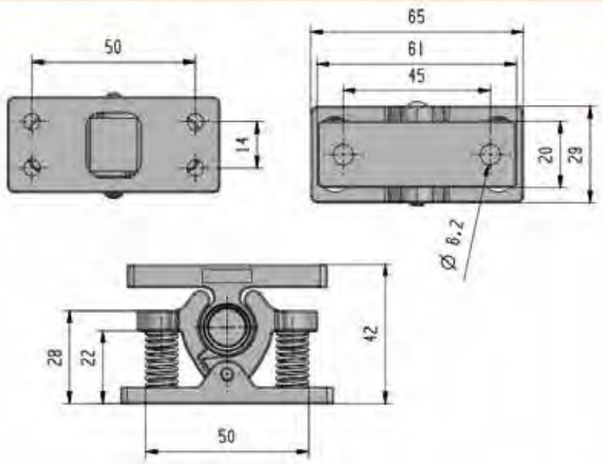

CLK23-1

Feature Description:

Material: ZDC zinc alloy, SUS spring, pin
Surface treatment: galvanized
Structural function: zinc alloy heavy-duty double spring door touch lock clamping round tube fixed base locking, easy and quick installation
Uses: Generally suitable for electrical cabinets, chassis cabinets, and automated sheet metal boxes
Remarks: Not limited by door panel thickness

特征说明:

- 材　　质: ZDC锌合金、SUS弹簧、销钉
- 表面处理: 镀锌
- 结构功能: 锌合金重型双弹簧门碰锁 夹持圆管固定底座锁闭，安装简易快捷
- 用　　途: 一般适用于电箱电柜、机箱机柜、，自动化钣金箱体使用
- 备　　注: 不受门板厚度限制

地址：广东省肇庆市高要区金利镇都播工业区　电话：13929897256　邮箱：526202547@qq.com
Add: Dubo Industrial Zone, Jinli Town, Gaoyao District, Zhaoqing City, Guangdong Province　TEL: 13929897256　Email: 526202547@qq.com

把手锁 Handle lock
圆柱锁 Cylinder lock
平面锁 Plane lock
连杆锁 Rod control lock
面板锁 Panel lock
搭扣锁 Tonggle and hook
拉手 Handles
限位 Door stop
铰链 Hinge
冷库把手 Handle latch
磁吸 Magnet catch
附件 Accessories

SB01系列

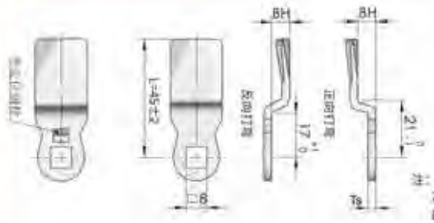

注：默认板厚Ts=3mm，有其他材质、中心距及板厚要求请另说明，外定位时铜柱代号前面加"D"。

SB02系列

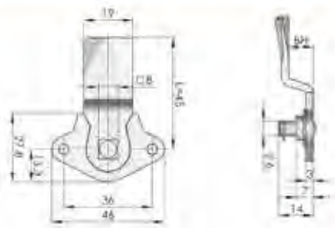

注：默认板厚Ts=3mm，有其他材质、中心距及板厚要求请另说明，外定位时铜柱代号前面加"D"。

SB03系列

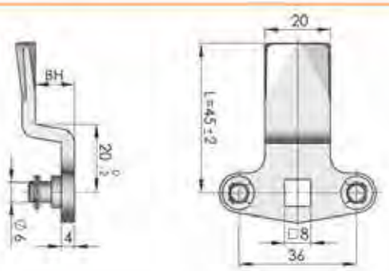

SB04系列

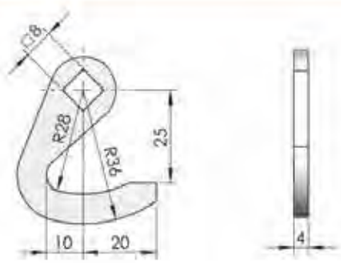

地址：广东省肇庆市高要区金利镇都播工业区 电话：13929897256 邮箱：526202547@qq.com
Add: Dubo Industrial Zone, Jinli Town, Gaoyao District, Zhaoqing City, Guangdong Province TEL: 13929897256 Email: 526202547@qq.com

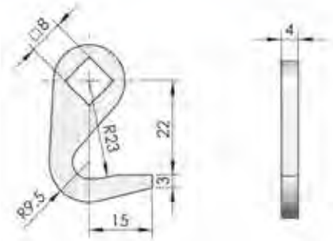

SB05系列

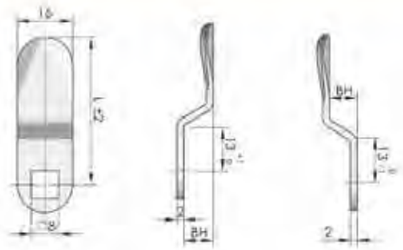

SB06系列

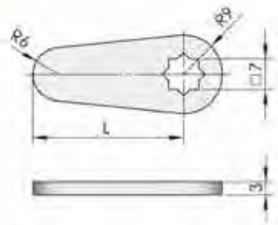

SB07系列

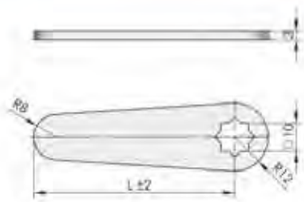

SB08系列

地址：广东省肇庆市高要区金利镇都播工业区 电话：13929897256 邮箱：526202547@qq.com
Add: Dubo Industrial Zone, Jinli Town, Gaoyao District, Zhaoqing City, Guangdong Province TEL: 13929897256 Email: 526202547@qq.com

把手锁 Handle lock
圆柱锁 Cylinder lock
平面锁 Plane lock
连杆锁 Rod control lock
面板锁 Panel lock
搭扣锁 Tonggle and hook
拉手 Handles
限位 Door stop
铰链 Hinge
冷库把手 Handle latch
磁吸 Magnet catch
附件 Accessories

SB09系列

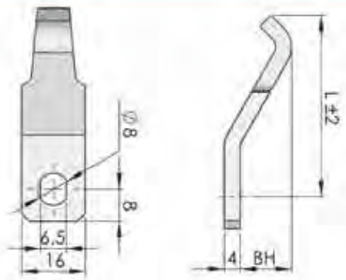

SB10系列

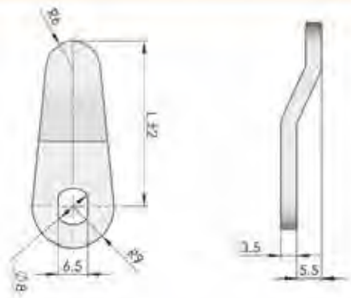

SB11系列

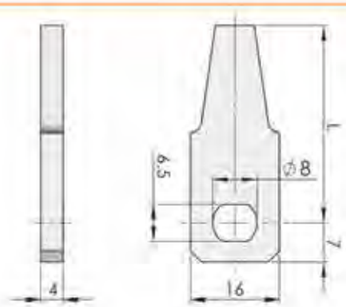

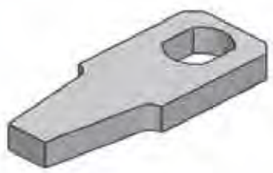

SB12系列

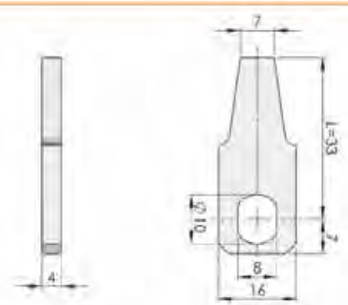

地址：广东省肇庆市高要区金利镇都播工业区 电话：13929897256 邮箱：526202547@qq.com
Add: Dubo Industrial Zone, Jinli Town, Gaoyao District, Zhaoqing City, Guangdong Province TEL: 13929897256 Email: 526202547@qq.com

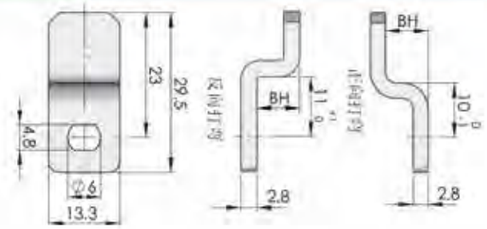

SB13系列

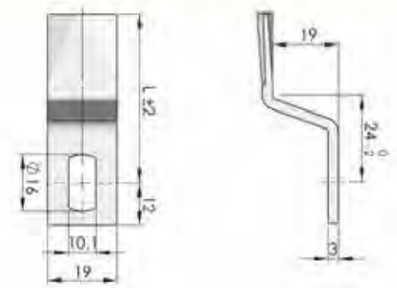

SB14系列

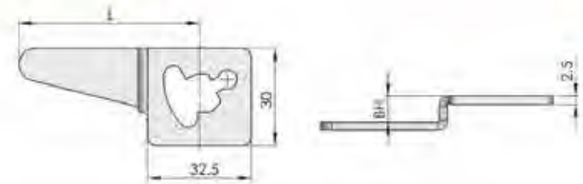

SB15（左）系列

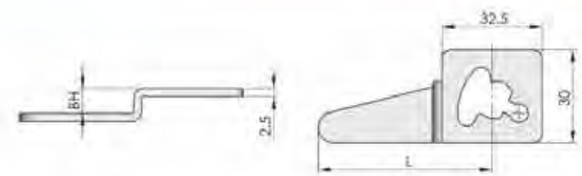

SB15（右）系列

把手锁 Handle lock
圆柱锁 Cylinder lock
平面锁 Plane lock
连杆锁 lock Rod control
面板锁 Panel lock
搭扣锁 hook Tonggle and
拉手 Handles
限位 Door stop
铰链 Hinge
冷库把手 Handle latch
磁吸 Magnet catch
附件 Accessories

地址：广东省肇庆市高要区金利镇都播工业区 电话：13929897256 邮箱：526202547@qq.com
Add: Dubo Industrial Zone, Jinli Town, Gaoyao District, Zhaoqing City, Guangdong Province TEL: 13929897256 Email: 526202547@qq.com

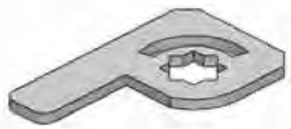

SB16-1

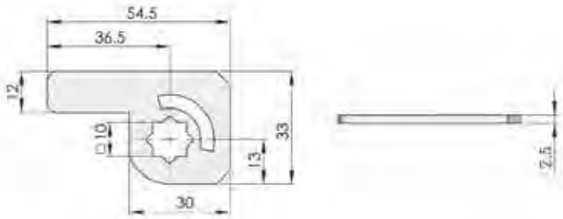

SB16-2

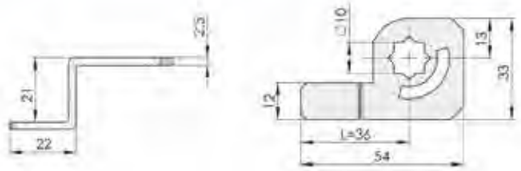

SB17-1

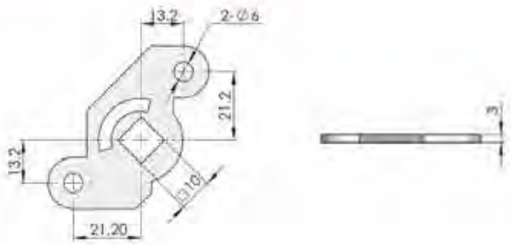

SB17-2

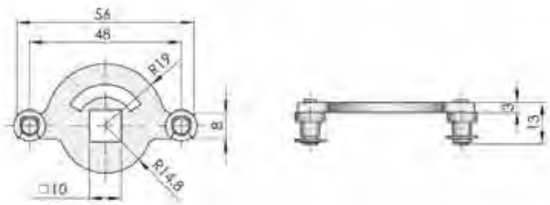

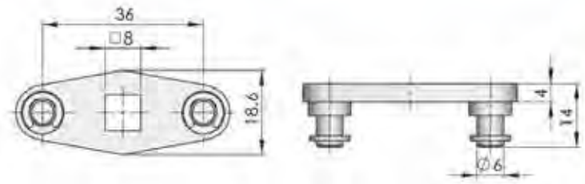

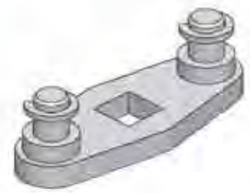

SB18-1

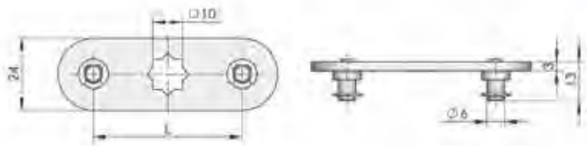

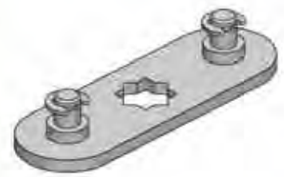

SB19-1

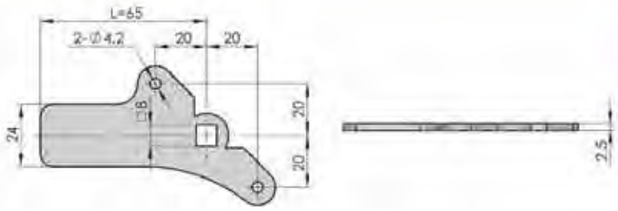

S3B6500

SB20-1

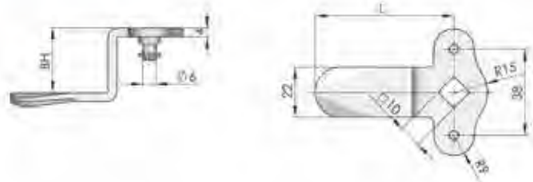

SB21-1

SB22系列

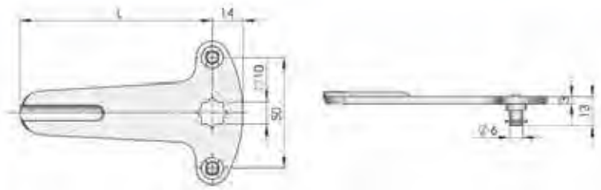

SB23-1

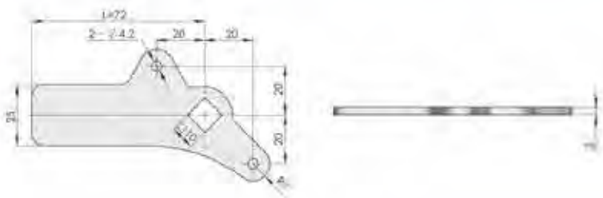

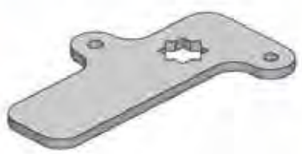

SB24-1

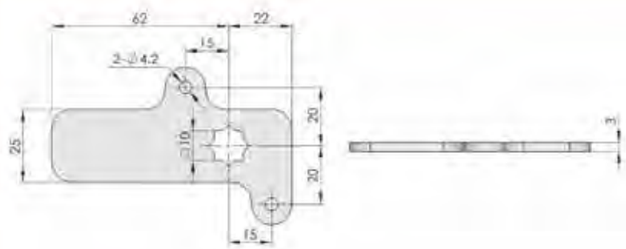

SB25-1Y

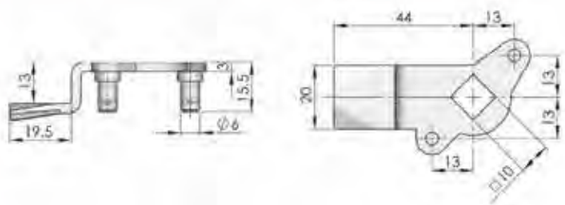

地址：广东省肇庆市高要区金利镇都播工业区 电话：13929897256 邮箱：526202547@qq.com
Add: Dubo Industrial Zone, Jinli Town, Gaoyao District, Zhaoqing City, Guangdong Province TEL: 13929897256 Email: 526202547@qq.com

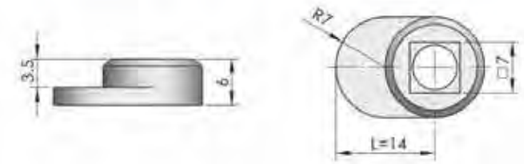

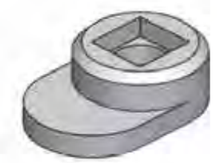

SB26-1

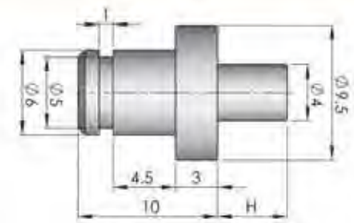

SB27-1

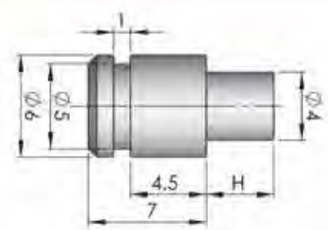

SB27-2

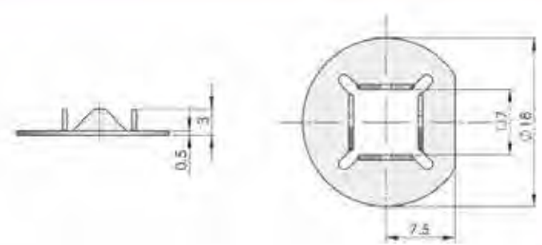

SB28-1

把手锁 Handle lock
圆柱锁 Cylinder lock
平面锁 Plane lock
连杆锁 lock Rod control
面板锁 Panel lock
搭扣锁 hook Tonggle and
拉手 Handles
限位 Door stop
铰链 Hinge
冷库把手 Handle latch
磁吸 Magnet catch
附件 Accessories

地址：广东省肇庆市高要区金利镇都播工业区 电话：13929897256 邮箱：526202547@qq.com
Add: Dubo Industrial Zone, Jinli Town, Gaoyao District, Zhaoqing City, Guangdong Province TEL: 13929897256 Email: 526202547@qq.com

把手锁 Handle lock

圆柱锁 Cylinder lock

平面锁 Plane lock

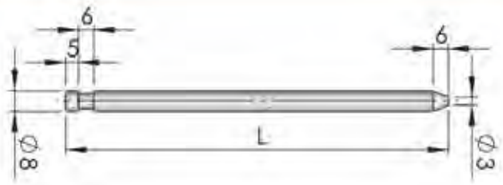

LG001-1

连杆锁 Rod control lock

面板锁 Panel lock

搭扣锁 Tonggle and hook

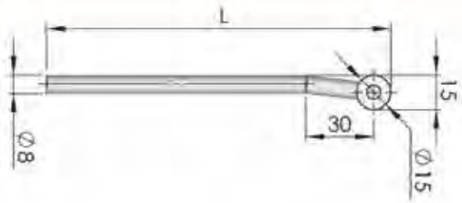

LG001-2

拉手 Handles

限位 Door stop

铰链 Hinge

LG001-3

冷库把手 Handle latch

磁吸 Magnet catch

附件 Accessories

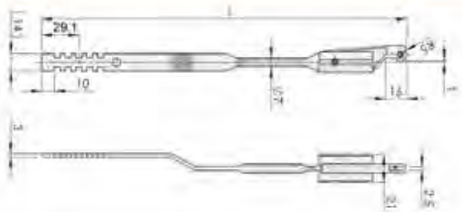

LG002-1

地址：广东省肇庆市高要区金利镇都播工业区 电话：13929897256 邮箱：526202547@qq.com
Add: Dubo Industrial Zone, Jinli Town, Gaoyao District, Zhaoqing City, Guangdong Province TEL: 13929897256 Email: 526202547@qq.com

LG002-2

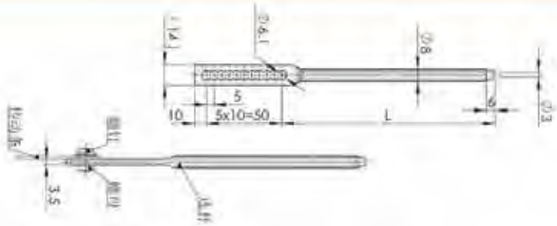

LG003

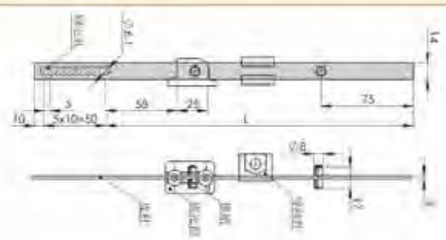

LG004

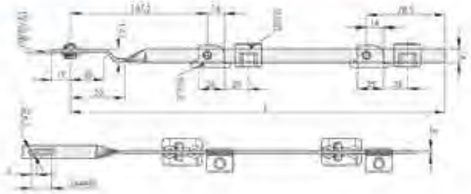

LG005

Handle lock 把手锁
Cylinder lock 圆柱锁
Plane lock 平面锁
lock Rod control 连杆锁
Panel lock 面板锁
hook Tonggle and 搭扣锁
Handles 拉手
Door stop 限位
Hinge 铰链
Handle latch 冷库把手
Magnet catch 磁吸
Accessories 附件

地址：广东省肇庆市高要区金利镇都播工业区 电话：13929897256 邮箱：526202547@qq.com
Add: Dubo Industrial Zone, Jinli Town, Gaoyao District, Zhaoqing City, Guangdong Province TEL: 13929897256 Email: 526202547@qq.com

LG006

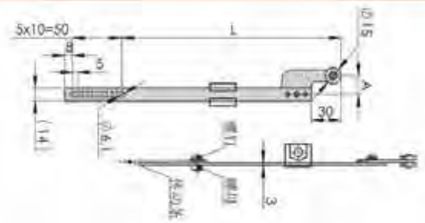

LG007-A

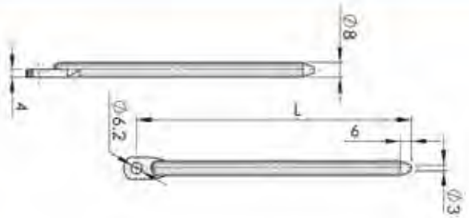

LG007-B

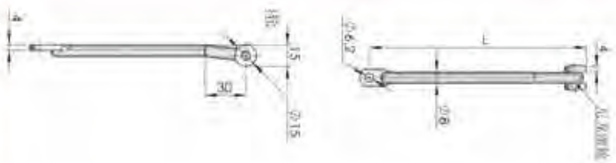

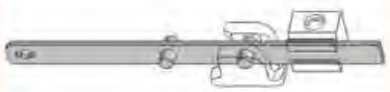

LG010

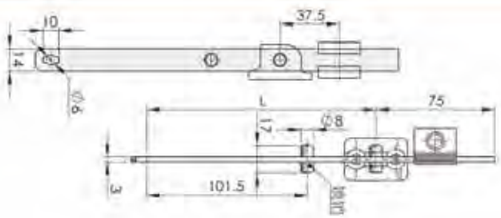

地址：广东省肇庆市高要区金利镇都播工业区 电话：13929897256 邮箱：526202547@qq.com
Add: Dubo Industrial Zone, Jinli Town, Gaoyao District, Zhaoqing City, Guangdong Province TEL: 13929897256 Email: 526202547@qq.com

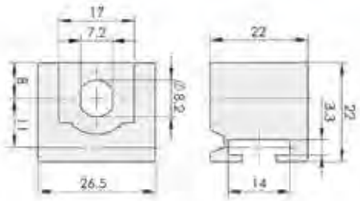

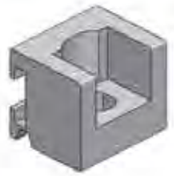

RG001-1

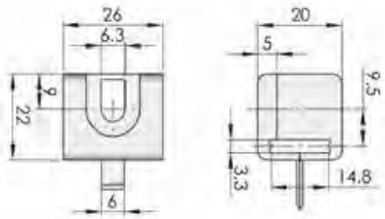

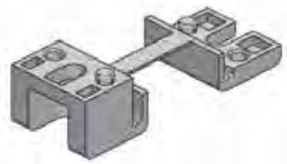

RG001-2

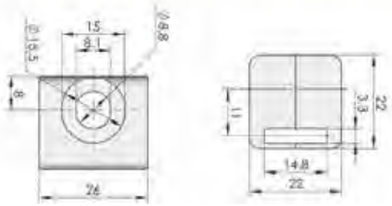

RG001-3

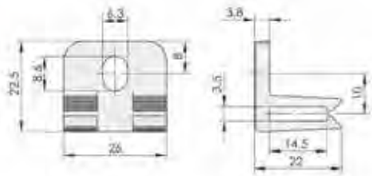

RG001-4

把手锁 Handle lock
圆柱锁 Cylinder lock
平面锁 Plane lock
连杆锁 lock Rod control
面板锁 Panel lock
搭扣锁 hook Tonggle and
拉手 Handles
限位 Door stop
铰链 Hinge
冷库把手 Handle latch
磁吸 Magnet catch
附件 Accessories

地址：广东省肇庆市高要区金利镇都播工业区 电话：13929897256 邮箱：526202547@qq.com
Add: Dubo Industrial Zone, Jinli Town, Gaoyao District, Zhaoqing City, Guangdong Province TEL: 13929897256 Email: 526202547@qq.com

把手锁 Handle lock
圆柱锁 Cylinder lock
平面锁 Plane lock
连杆锁 Rod control lock
面板锁 Panel lock
搭扣锁 Tonggle and hook
拉手 Handles
限位 Door stop
铰链 Hinge
冷库把手 Handle latch
磁吸 Magnet catch
附件 Accessories

RG001-5

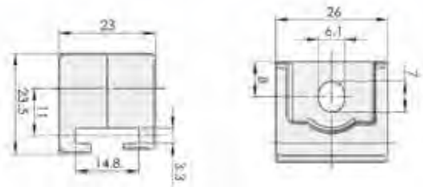

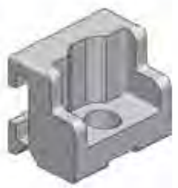

RG001-8

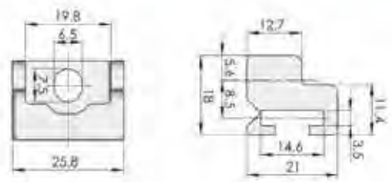

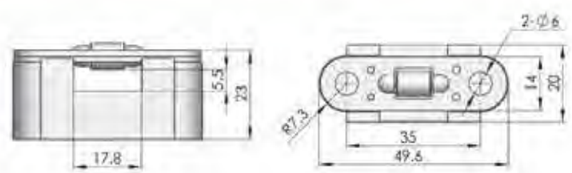

RG001-9

RG001-10

地址：广东省肇庆市高要区金利镇都播工业区 电话：13929897256 邮箱：526202547@qq.com
Add: Dubo Industrial Zone, Jinli Town, Gaoyao District, Zhaoqing City, Guangdong Province TEL: 13929897256 Email: 526202547@qq.com

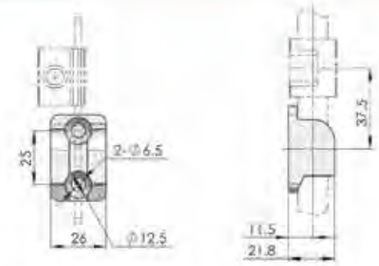

RG003-1

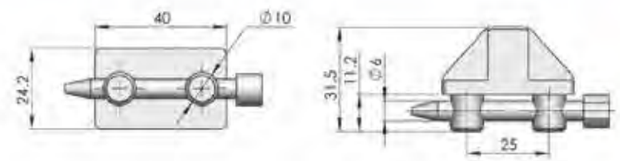

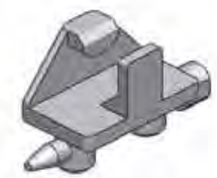

RG003-2

RG003-3

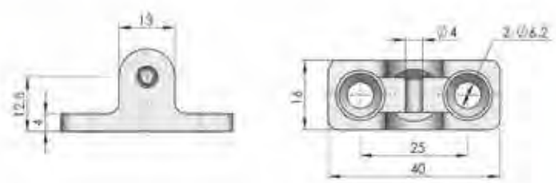

RG003-4

把手锁 Handle lock
圆柱锁 Cylinder lock
平面锁 Plane lock
连杆锁 lock Rod control
面板锁 Panel lock
搭扣锁 hook Tonggle and
拉手 Handles
限位 Door stop
铰链 Hinge
冷库把手 Handle latch
磁吸 Magnet catch
附件 Accessories

地址：广东省肇庆市高要区金利镇都播工业区 电话：13929897256 邮箱：526202547@qq.com
Add: Dubo Industrial Zone, Jinli Town, Gaoyao District, Zhaoqing City, Guangdong Province TEL: 13929897256 Email: 526202547@qq.com

把手锁 Handle lock
圆柱锁 Cylinder lock
平面锁 Plane lock
连杆锁 Rod control lock
面板锁 Panel lock
搭扣锁 Tonggle and hook
拉手 Handles
限位 Door stop
铰链 Hinge
冷库把手 Handle latch
磁吸 Magnet catch
附件 Accessories

RG003-5

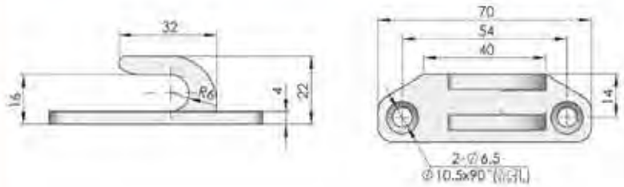

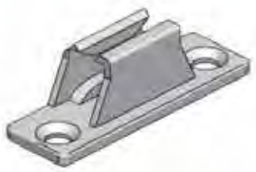

RG003-6

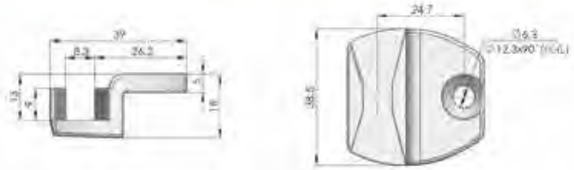

RG003-7

RG003-8

地址：广东省肇庆市高要区金利镇都播工业区 电话：13929897256 邮箱：526202547@qq.com
Add: Dubo Industrial Zone, Jinli Town, Gaoyao District, Zhaoqing City, Guangdong Province TEL: 13929897256 Email: 526202547@qq.com

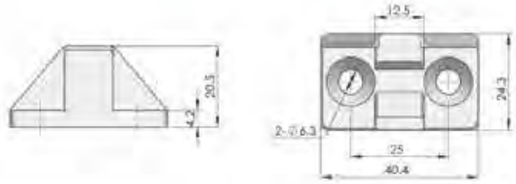

RG003-9

RG003-10

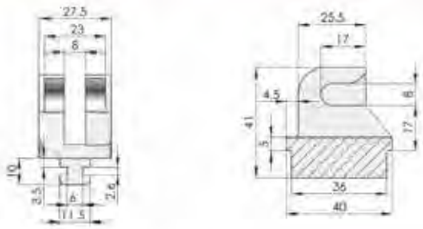

RG003-11

RG003-14

地址：广东省肇庆市高要区金利镇都播工业区 电话：13929897256 邮箱：526202547@qq.com
Add: Dubo Industrial Zone, Jinli Town, Gaoyao District, Zhaoqing City, Guangdong Province TEL: 13929897256 Email: 526202547@qq.com

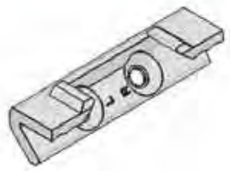

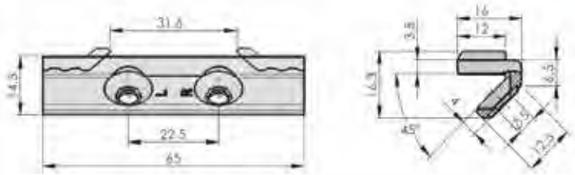

RG003-15

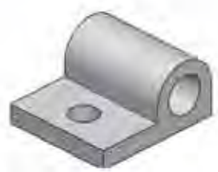

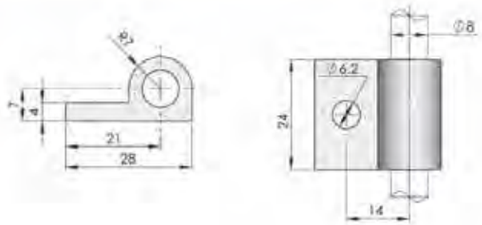

RG004-1

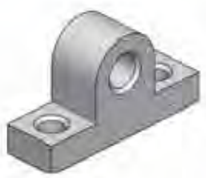

RG004-2

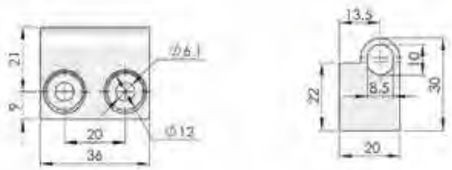

RG004-3

地址：广东省肇庆市高要区金利镇都播工业区 电话：13929897256 邮箱：526202547@qq.com
Add: Dubo Industrial Zone, Jinli Town, Gaoyao District, Zhaoqing City, Guangdong Province TEL: 13929897256 Email: 526202547@qq.com

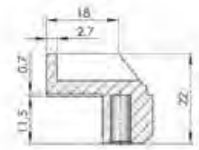

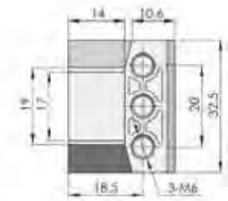

RG005-1

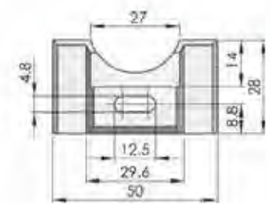

RG005-2

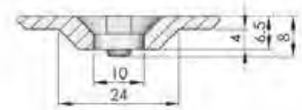

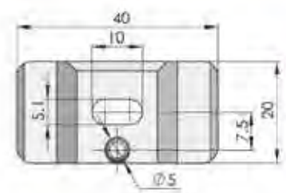

RG005-3

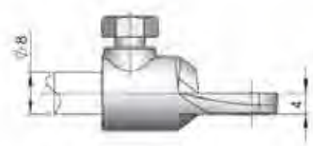

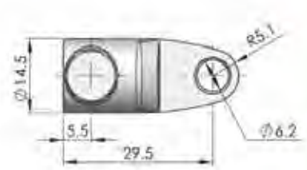

RG006-1

地址：广东省肇庆市高要区金利镇都播工业区 电话：13929897256 邮箱：526202547@qq.com
Add: Dubo Industrial Zone, Jinli Town, Gaoyao District, Zhaoqing City, Guangdong Province TEL: 13929897256 Email: 526202547@qq.com

把手锁 Handle lock
圆柱锁 Cylinder lock
平面锁 Plane lock
连杆锁 Rod control lock
面板锁 Panel lock
搭扣锁 Tonggle and hook
拉手 Handles
限位 Door stop
铰链 Hinge
冷库把手 Handle latch
磁吸 Magnet catch
附件 Accessories

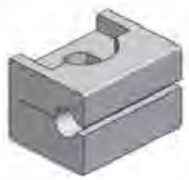

RG006-2

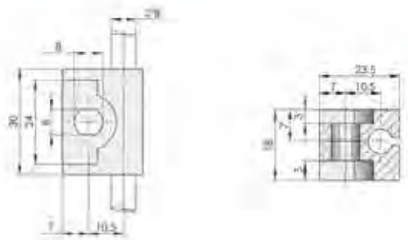

RG007

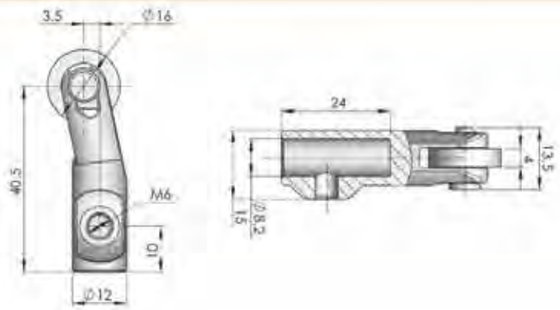

RG008

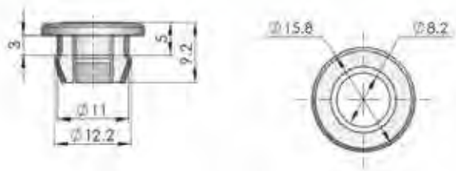

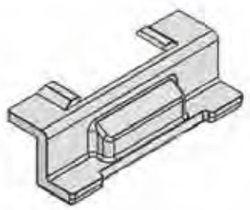

RG011

地址：广东省肇庆市高要区金利镇都播工业区 电话：13929897256 邮箱：526202547@qq.com
Add: Dubo Industrial Zone, Jinli Town, Gaoyao District, Zhaoqing City, Guangdong Province TEL: 13929897256 Email: 526202547@qq.com

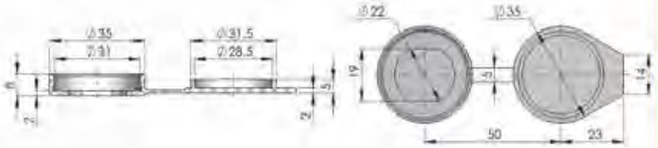

WP001

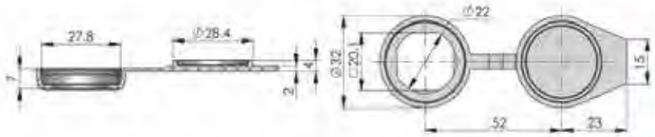

WP002

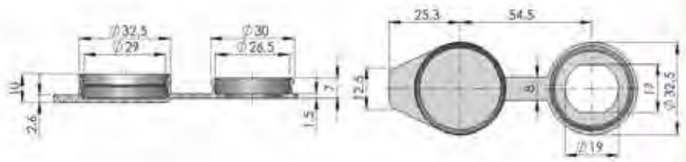

WP003

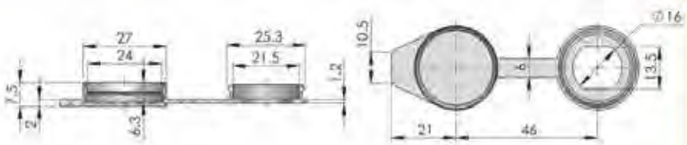

WP004

把手锁 Handle lock
圆柱锁 Cylinder lock
平面锁 Plane lock
连杆锁 lock Rod control
面板锁 Panel lock
搭扣锁 hook Tonggle and
拉手 Handles
限位 Door stop
铰链 Hinge
冷库把手 Handle latch
磁吸 Magnet catch
附件 Accessories

地址：广东省肇庆市高要区金利镇都播工业区 电话：13929897256 邮箱：526202547@qq.com
Add: Dubo Industrial Zone, Jinli Town, Gaoyao District, Zhaoqing City, Guangdong Province TEL: 13929897256 Email: 526202547@qq.com

WP007

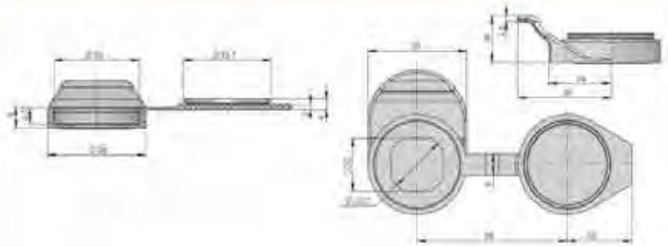

DP001-1

HP001

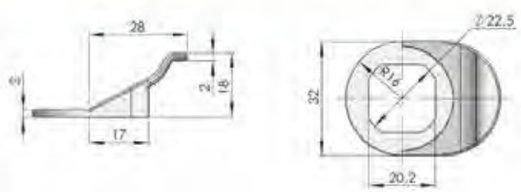

HP003

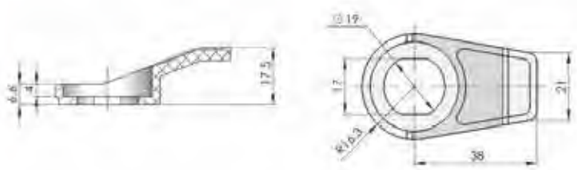

地址：广东省肇庆市高要区金利镇都播工业区 电话：13929897256 邮箱：526202547@qq.com
Add: Dubo Industrial Zone, Jinli Town, Gaoyao District, Zhaoqing City, Guangdong Province TEL: 13929897256 Email: 526202547@qq.com

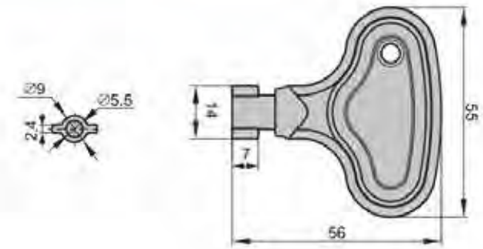

YS01-1

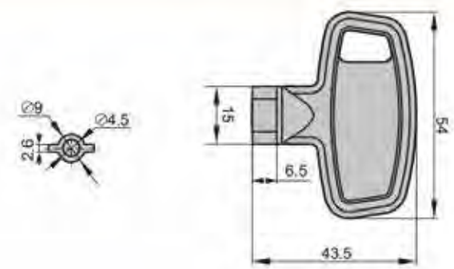

YS01-2

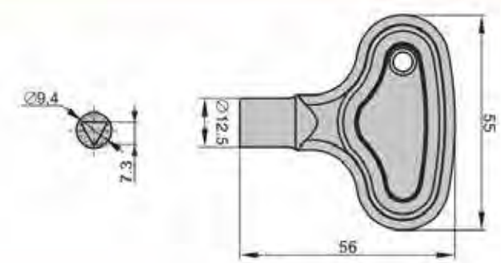

YS01-3

YS01-4

把手锁 Handle lock
圆柱锁 Cylinder lock
平面锁 Plane lock
连杆锁 lock Rod control
面板锁 Panel lock
搭扣锁 hook Tonggle and
拉手 Handles
限位 Door stop
铰链 Hinge
冷库把手 Handle latch
磁吸 Magnet catch
附件 Accessories

地址：广东省肇庆市高要区金利镇都播工业区 电话：13929897256 邮箱：526202547@qq.com
Add: Dubo Industrial Zone, Jinli Town, Gaoyao District, Zhaoqing City, Guangdong Province TEL: 13929897256 Email: 526202547@qq.com

PS008-3
左右滑块

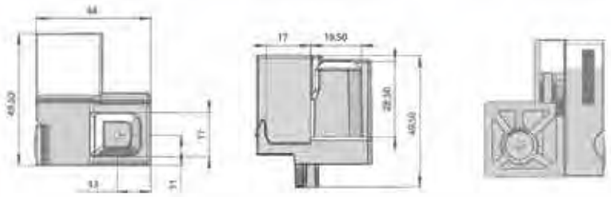

PS010
侧板螺钉

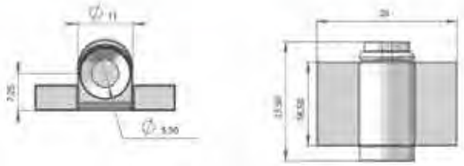

PS010-A
新侧板附件

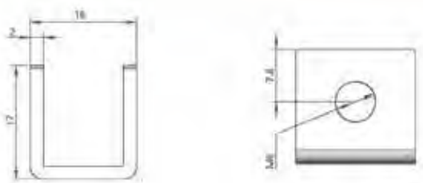

PS011-3
双门挡块

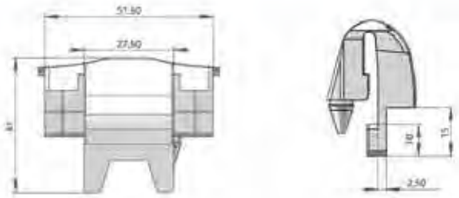

PS011-5
双门垫胶

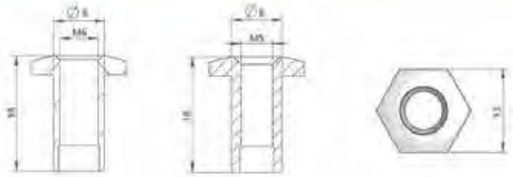

PS013
空心螺母

PS014
后板螺钉

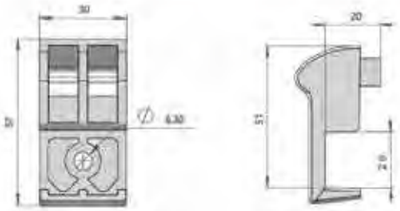

PS015
门托

把手锁 Handle lock
圆柱锁 Cylinder lock
平面锁 Plane lock
连杆锁 Rod control lock
面板锁 Panel lock
搭扣锁 Tonggle and hook
拉手 Handles
限位 Door stop
铰链 Hinge
冷库把手 Handle latch
磁吸 Magnet catch
附件 Accessories

PS016
三通

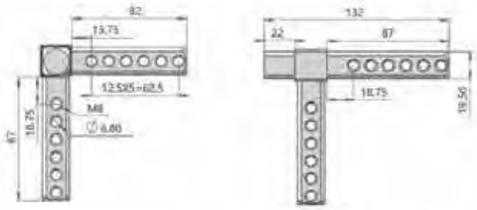

PS016-8
框架链接固定件

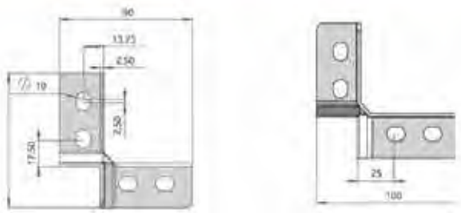

PS017-1
方螺母

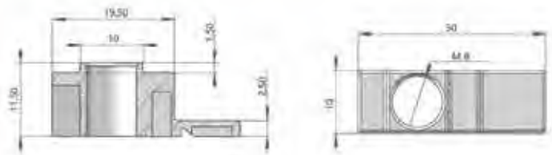

PS017-2
插入式弹簧螺母

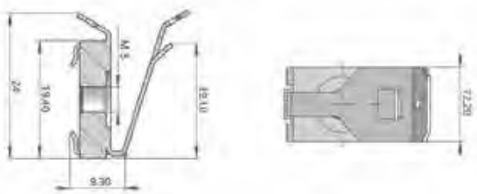

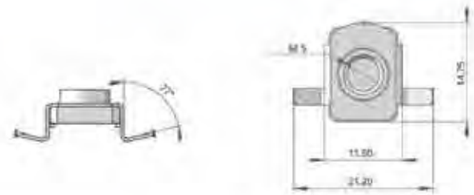

PS017-3
插入螺母

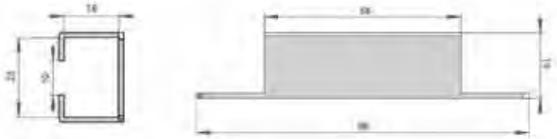

PS018
锁杆导向件

PS018-1
新锁杆导向件

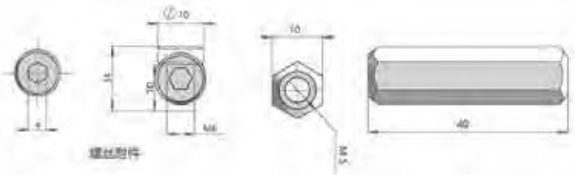

PS020-1
六角钢井柜件